WILDEN®

Part of Pump Solutions Group

A DOVER® COMPANY

EOM

Engineering Operation & Maintenance

P4/PX4

Original™ Series Metal Pump

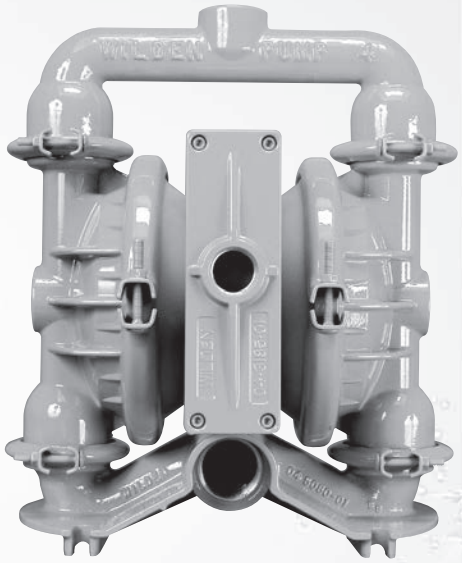

Where Innovation Flows

www.wildenpump.com

PRO-FLO® PROGRESSIVE PUMP TECHNOLOGY

PRO-FLO™ X PROGRESSIVE PUMP TECHNOLOGY

WIL-10310-E

WIL-10310-E-08
REPLACES WIL-10310-E-07

TABLE OF CONTENTS

SECTION 1 CAUTIONS—READ FIRST! 1
SECTION 2 WILDEN PUMP DESIGNATION SYSTEM 2
SECTION 3 HOW IT WORKS—PUMP & AIR DISTRIBUTION SYSTEM 3
SECTION 4 DIMENSIONAL DRAWINGS 4
SECTION 5 PERFORMANCE
A. P4 Metal Performance Curves
Rubber-Fitted 6
TPE-Fitted 6
Reduced-Stroke PTFE-Fitted 7
Full-Stroke PTFE-Fitted 7
Ultra-Flex™ -Fitted 8
Suction-Lift Curves 9
B. PX4 Performance
Operating Principle 12
How to Use this EMS Curve 13
Performance Curves
Rubber-Fitted 16
TPE-Fitted 17
Reduced-Stroke PTFE-Fitted 18
Full-Stroke PTFE-Fitted 19
Ultra-Flex™ -Fitted 20
Suction-Lift Curves 21
SECTION 6 SUGGESTED INSTALLATION, OPERATION & TROUBLESHOOTING 23
SECTION 7 DISASSEMBLY / REASSEMBLY 26
SECTION 8 EXPLODED VIEW AND PARTS LISTING
P4 Metal
Full-Stroke Diaphragm-Fitted 34
Reduced-Stroke Diaphragm-Fitted 36
P4 Metal Saniflo™ 1935/2004/EC 38
1-Piece Center Section Full Stroke Diaphragm-Fitted 40
1-Piece Center Section Reduced Stroke Diaphragm-Fitted 42
P4 Metal Saniflo™ 1935/2004/EC (1-Piece Center) 44
PX4 Metal
Full-Stroke Diaphragm-Fitted 46
Reduced-Stroke Diaphragm-Fitted 48
PX4 Metal Saniflo™ 1935/2004/EC 50
SECTION 9 ELASTOMER OPTIONS 53

Member of: Hydraulic INSTITUTE
Class I & II Ozone NON USE U.S. Clean Air Act Amendments of 1990 Depleting Substances

CAUTIONS—READ FIRST!

CAUTION: Do not apply compressed air to the exhaust port — pump will not function.

CAUTION: Do not, under any circumstance, loosen the set screw located at the adjust dial of the Pro-Flo X™ pump. If the set screw is loose when the pump is pressurized, it could eject and cause injury to anyone in the area.

CAUTION: Do not over-lubricate air supply — excess lubrication will reduce pump performance. Pump is pre-lubed.

TEMPERATURE LIMITS:

Polypropylene	0°C to 79°C	32°F to 175°F
PVDF	–12°C to 107°C	10°F to 225°F
PFA	7°C to 107°C	20°F to 225°F
Neoprene	–18°C to 93°C	0°F to 200°F
Buna-N	–12°C to 82°C	10°F to 180°F
EPDM	–51°C to 138°C	–60°F to 280°F
Viton® FKM	–40°C to 177°C	–40°F to 350°F
Wil-Flex™	–40°C to 107°C	–40°F to 225°F
Saniflex™	–29°C to 104°C	–20°F to 220°F
Polyurethane	–12°C to 66°C	10°F to 150°F
Polytetrafluoroethylene (PTFE)[1]	4°C to 104°C	40°F to 220°F
Nylon	–18°C to 93°C	0°F to 200°F
Acetal	–29°C to 82°C	–20°F to 180°F
SIPD PTFE with Neoprene-backed	4°C to 104°C	40°F to 220°F
SIPD PTFE with EPDM-backed	–10°C to 137°C	14°F to 280°F
Polyethylene	0°C to 70°C	32°F to 158°F
Geolast®	–40°C to 82°C	–40°F to 180°F

[1]4°C to 149°C (40°F to 300°F) - 13 mm (1/2") and 25 mm (1") models only.

NOTE: Not all materials are available for all models. Refer to Section 2 for material options for your pump.

CAUTION: When choosing pump materials, be sure to check the temperature limits for all wetted components. Example: Viton® has a maximum limit of 177°C (350°F) but polypropylene has a maximum limit of only 79°C (175°F).

CAUTION: Maximum temperature limits are based upon mechanical stress only. Certain chemicals will significantly reduce maximum safe operating temperatures. Consult Chemical Resistance Guide (E4) for chemical compatibility and temperature limits.

WARNING: Prevent static sparking. If static sparking occurs, fire or explosion could result. Pump, valves and containers must be grounded to a proper grounding point when handling flammable fluids and whenever discharge of static electricity is a hazard.

CAUTION: Do not exceed 8.6 bar (125 psig) air supply pressure.

CAUTION: The process fluid and cleaning fluids must be chemically compatible with all wetted pump components. Consult Chemical Resistance Guide (E4).

CAUTION: Do not exceed 82°C (180°F) air inlet temperature for Pro-Flo X™ models.

CAUTION: Pumps should be thoroughly flushed before installing into process lines. FDA- and USDA-approved pumps should be cleaned and/or sanitized before being used.

CAUTION: Always wear safety glasses when operating pump. If diaphragm rupture occurs, material being pumped may be forced out air exhaust.

CAUTION: Before any maintenance or repair is attempted, the compressed air line to the pump should be disconnected and all air pressure allowed to bleed from pump. Disconnect all intake, discharge and air lines. Drain the pump by turning it upside down and allowing any fluid to flow into a suitable container.

CAUTION: Blow out air line for 10 to 20 seconds before attaching to pump to make sure all pipeline debris is clear. Use an in-line air filter. A 5μ (micron) air filter is recommended.

NOTE: When installing PTFE diaphragms, it is important to tighten outer pistons simultaneously (turning in opposite directions) to ensure tight fit. (See torque specifications in Section 7.)

NOTE: Cast Iron PTFE-fitted pumps come standard from the factory with expanded PTFE gaskets installed in the diaphragm bead of the liquid chamber. PTFE gaskets cannot be re-used. Consult PS-TG for installation instructions during reassembly.

NOTE: Before starting disassembly, mark a line from each liquid chamber to its corresponding air chamber. This line will assist in proper alignment during reassembly.

CAUTION: Pro-Flo® pumps cannot be used in submersible applications. Pro-Flo X™ is available in both submersible and non-submersible options. Do not use non-submersible Pro-Flo X™ models in submersible applications. Turbo-Flo® pumps can also be used in submersible applications.

CAUTION: Tighten all hardware prior to installation.

PRO-FLO® PROGRESSIVE PUMP TECHNOLOGY

WILDEN

WILDEN PUMP DESIGNATION SYSTEM

P4/PX4 METAL

38 mm (1-1/2") Pump
Maximum Flow Rate:
348 lpm (92 gpm)

LEGEND

PX4 / XXXXX / XXX / XX / XXX / *XXXX*

- PX4 — MODEL
- XXXXX — WETTED PARTS & OUTER PISTON
- XXXXX — AIR CHAMBERS
- XXXXX — CENTER BLOCK
- XXXXX — AIR VALVE
- XXX — DIAPHRAGMS
- XX — VALVE BALLS
- XXX — VALVE SEAT
- XXX — O-RINGS
- *XXXX* — SPECIALTY CODE (if applicable)

MATERIAL CODES

MODEL
P4 = PRO-FLO®
PX4 = PRO-FLO X™
XPX4 = PRO-FLO X™ ATEX

WETTED PARTS & OUTER PISTON
AA = ALUMINUM / ALUMINUM
SS = STAINLESS STEEL / STAINLESS STEEL
WW = CAST IRON / CAST IRON
WM = CAST IRON / MILD STEEL

AIR CHAMBERS/CENTER SECTION
A = ALUMINUM
L = ACETAL (P4 only)
N = NICKEL-PLATED
S = STAINLESS STEEL
V = HALAR® COATED (P4 only)
C = PFA COATED (P4 only)

CENTER SECTION/BLOCK
A = ALUMINUM (PX4 only)
L = ACETAL (P4 only)
N = NICKEL-PLATED (PX4 only)
P = POLYPROPYLENE (P4 only)
S = STAINLESS STEEL (PX4 only)

NOTE:
[1]Meets Requirements of FDA CFR21.177
[2]Meets Requirements of USP Class VI
[3]Meets Requirements of 1935/2004/EC

AIR VALVE
A = ALUMINUM (PX4 only)
L = ACETAL (P4 only)
N = NICKEL-PLATED (PX4 only)
P = POLYPROPYLENE
S = STAINLESS STEEL (PX4 only)

DIAPHRAGMS
BNS = BUNA-N (Red Dot)
BNU = BUNA-N, ULTRA-FLEX™ (Red Dot)[1,3]
EPS = EPDM (Blue Dot)
EPU = EPDM, ULTRA-FLEX™ (Blue Dot)[1,3]
FBS = SANITARY BUNA (Two Yellow Dots)[1,3]
FES = SANITARY EPDM (Two Blue Dots)[1,3]
FSS = SANIFLEX™ [Hytrel® (Cream)][1,3]
FWS = SANITARY WIL-FLEX™, EZ-INSTALL [Santoprene® (Two Orange Dots)][1,3]
NES = NEOPRENE (Green Dot)
NEU = NEOPRENE, ULTRA-FLEX™ (Green Dot)
PUS = POLYURETHANE (Clear)
TEU = PTFE W/EPDM BACK-UP (White)[1,2,3]
TNU = PTFE W/NEOPRENE BACK-UP (White)
TSS = FULL-STROKE PTFE W/SANIFLEX™ BACK-UP[1,2,3]
TSU = PTFE W/SANIFLEX™ BACK-UP (White)[1,2,3]
TWS = FULL-STROKE PTFE W/WIL-FLEX™ BACK-UP[1,2,3]
VTS = VITON® (White Dot)
VTU = VITON®, ULTRA-FLEX™ (White Dot)
WFS = WIL-FLEX™ [Santoprene® (Orange Dot)]
XBS = CONDUCTIVE BUNA-N (Two Red Dots)

VALVE BALL
BN = BUNA-N (Red Dot)
FS = SANIFLEX™ [Hytrel® (Cream)][1,3]
EP = EPDM (Blue Dot)
NE = NEOPRENE (Green Dot)
PU = POLYURETHANE (Clear)
TF = PTFE (White)[1,2,3]
VT = VITON® (Silver or White Dot)
WF= WIL-FLEX™ [Santoprene (Orange Dot)]

VALVE SEAT
A = ALUMINUM
BN = BUNA-N (Red Dot)
FS = SANIFLEX™ [Hytrel® (Cream)][1,3]
H = ALLOY C
M = MILD STEEL
EP = EPDM (Blue Dot)
NE = NEOPRENE (Green Dot)
PU = POLYURETHANE (Clear)
S = STAINLESS STEEL
VT = VITON® (Silver or White Dot)
WF= WIL-FLEX™ [Santoprene (Orange Dot)]

VALVE SEAT O-RING
TF = PTFE[1,2,3]

SPECIALTY CODES

0014 BSP
0023 Wing nuts
0030 Screen based
0036 Screen based, BSP
0044 Stallion, balls & seats ONLY
0047 Stallion externals, balls and seats
0067 Saniflo FDA, Wil-Gard 220V
0070 Saniflo FDA
0075 Saniflo FDA, Stallion balls and seats
0079 Tri-clamp fittings, wing nuts
0080 Tri-clamp fittings ONLY
0100 Wil-Gard 110V
0102 Wil-Gard sensor wires ONLY
0103 Wil-Gard 220V
0108 BSP, Wil-Gard 220V
0118 Stallion balls and seats ONLY, BSP
0120 Saniflo FDA, Wil-Gard 110V
0330 Wing nuts BSP
0067E Saniflo™ FDA, Wil-Gard II™ 220V (1935/2004/EC)
0070E Saniflo™ FDA (1935/2004/EC)
0075E Saniflo™ FDA, Stallion balls and seats (1935/2004/EC)
0120E Saniflo™ FDA, Wil-Gard II™ 110V (1935/2004/EC)

NOTE: MOST ELASTOMERIC MATERIALS USE COLORED DOTS FOR IDENTIFICATION.

NOTE: Not all models are available with all material options.

Viton® is a registered trademark of DuPont Dow Elastomers.
Halar® is a registered trademark of Solvay.

PRO-FLO® PROGRESSIVE PUMP TECHNOLOGY

HOW IT WORKS—PUMP

The Wilden diaphragm pump is an air-operated, positive displacement, self-priming pump. These drawings show flow pattern through the pump upon its initial stroke. It is assumed the pump has no fluid in it prior to its initial stroke.

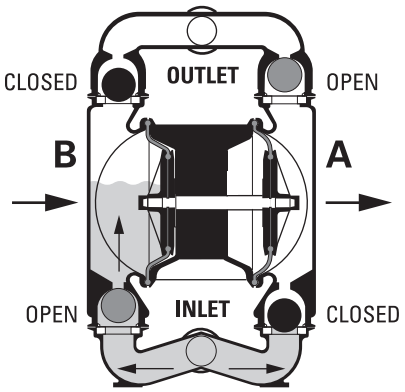

FIGURE 1 The air valve directs pressurized air to the back side of diaphragm A. The compressed air is applied directly to the liquid column separated by elastomeric diaphragms. The diaphragm acts as a separation membrane between the compressed air and liquid, balancing the load and removing mechanical stress from the diaphragm. The compressed air moves the diaphragm away from the center of the pump. The opposite diaphragm is pulled in by the shaft connected to the pressurized diaphragm. Diaphragm B is on its suction stroke; air behind the diaphragm has been forced out to atmosphere through the exhaust port of the pump. The movement of diaphragm B toward the center of the pump creates a vacuum within chamber B. Atmospheric pressure forces fluid into the inlet manifold forcing the inlet valve ball off its seat. Liquid is free to move past the inlet valve ball and fill the liquid chamber (see shaded area).

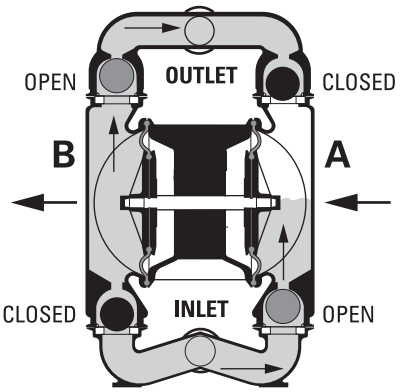

FIGURE 2 When the pressurized diaphragm, diaphragm A, reaches the limit of its discharge stroke, the air valve redirects pressurized air to the back side of diaphragm B. The pressurized air forces diaphragm B away from the center while pulling diaphragm A to the center. Diaphragm B is now on its discharge stroke. Diaphragm B forces the inlet valve ball onto its seat due to the hydraulic forces developed in the liquid chamber and manifold of the pump. These same hydraulic forces lift the discharge valve ball off its seat, while the opposite discharge valve ball is forced onto its seat, forcing fluid to flow through the pump discharge. The movement of diaphragm A toward the center of the pump creates a vacuum within liquid chamber A. Atmospheric pressure forces fluid into the inlet manifold of the pump. The inlet valve ball is forced off its seat allowing the fluid being pumped to fill the liquid chamber.

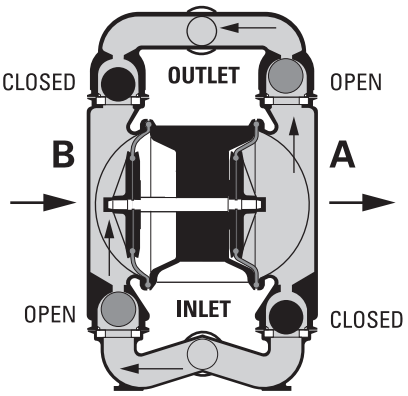

FIGURE 3 At completion of the stroke, the air valve again redirects air to the back side of diaphragm A, which starts diaphragm B on its exhaust stroke. As the pump reaches its original starting point, each diaphragm has gone through one exhaust and one discharge stroke. This constitutes one complete pumping cycle. The pump may take several cycles to completely prime depending on the conditions of the application.

PRO-FLO® PROGRESSIVE PUMP TECHNOLOGY

HOW IT WORKS—AIR DISTRIBUTION SYSTEM

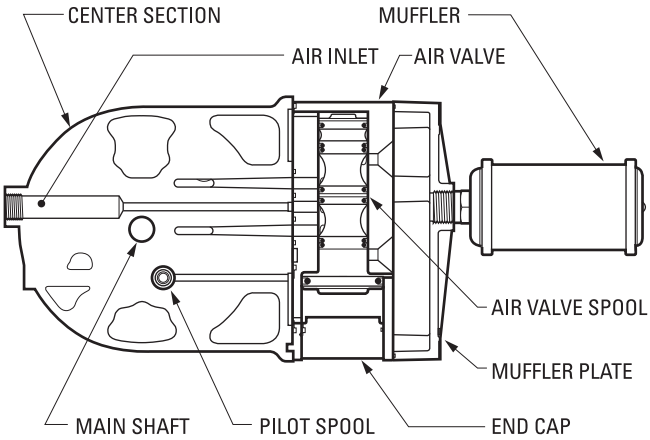

The Pro-Flo® patented air distribution system incorporates two moving parts: the air valve spool and the pilot spool. The heart of the system is the air valve spool and air valve. This valve design incorporates an unbalanced spool. The smaller end of the spool is pressurized continuously, while the large end is alternately pressurized then exhausted to move the spool. The spool directs pressurized air to one air chamber while exhausting the other. The air causes the main shaft/diaphragm assembly to shift to one side — discharging liquid on that side and pulling liquid in on the other side. When the shaft reaches the end of its stroke, the inner piston actuates the pilot spool, which pressurizes and exhausts the large end of the air valve spool. The repositioning of the air valve spool routes the air to the other air chamber.

DIMENSIONAL DRAWINGS

P4 Metal

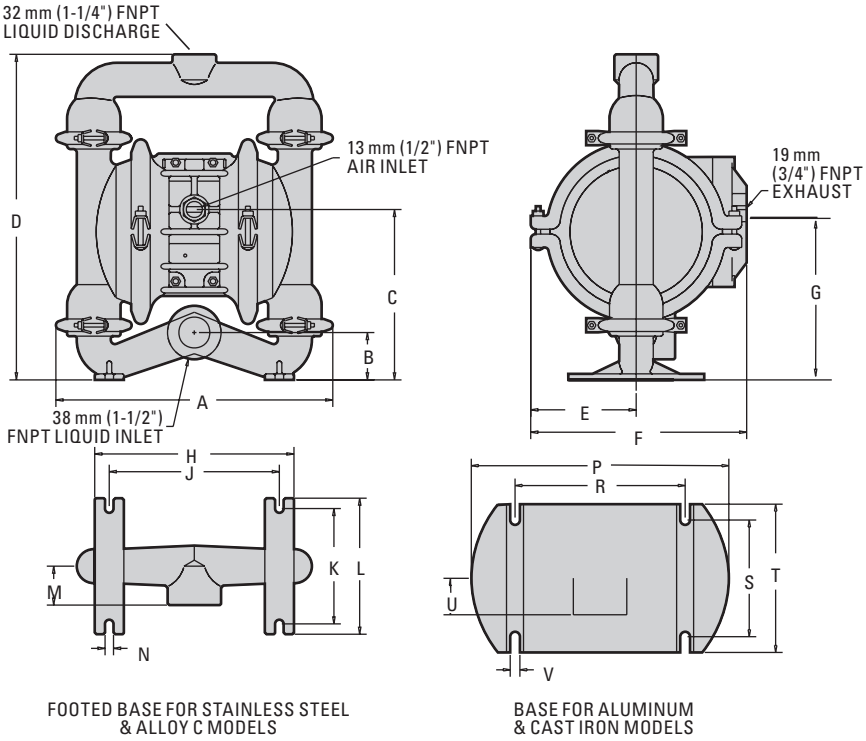

FOOTED BASE FOR STAINLESS STEEL & ALLOY C MODELS

BASE FOR ALUMINUM & CAST IRON MODELS

DIMENSIONS

ITEM	METRIC (mm)	STANDARD (inch)
A	368	14.5
B	64	2.5
C	206	8.1
D	429	16.9
E	147	5.8
F	308	12.1
G	211	8.3
H	262	10.3
J	224	8.8
K	152	6.0
L	178	7.0
M	51	2.0
N	10	0.4
P	335	13.2
R	224	8.8
S	135	5.3
T	196	7.7
U	48	1.9
V	13	0.5

P4 Metal Saniflo FDA

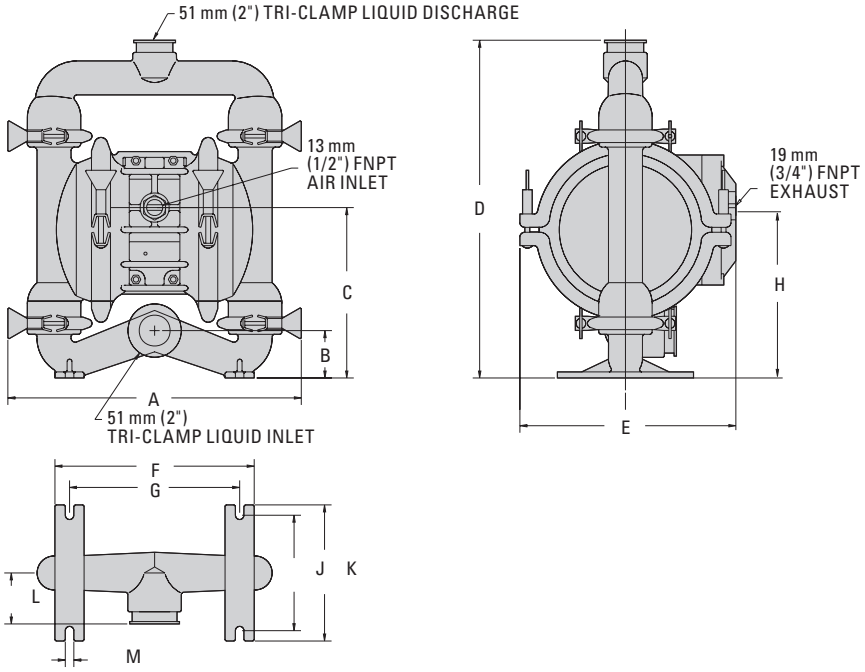

DIMENSIONS

ITEM	METRIC (mm)	STANDARD (inch)
A	389	15.3
B	64	2.5
C	206	8.1
D	442	17.4
E	308	12.1
F	262	10.3
G	224	8.8
H	211	8.3
J	152	6.0
K	178	7.0
L	66	2.6
M	10	0.4

PX4 Metal

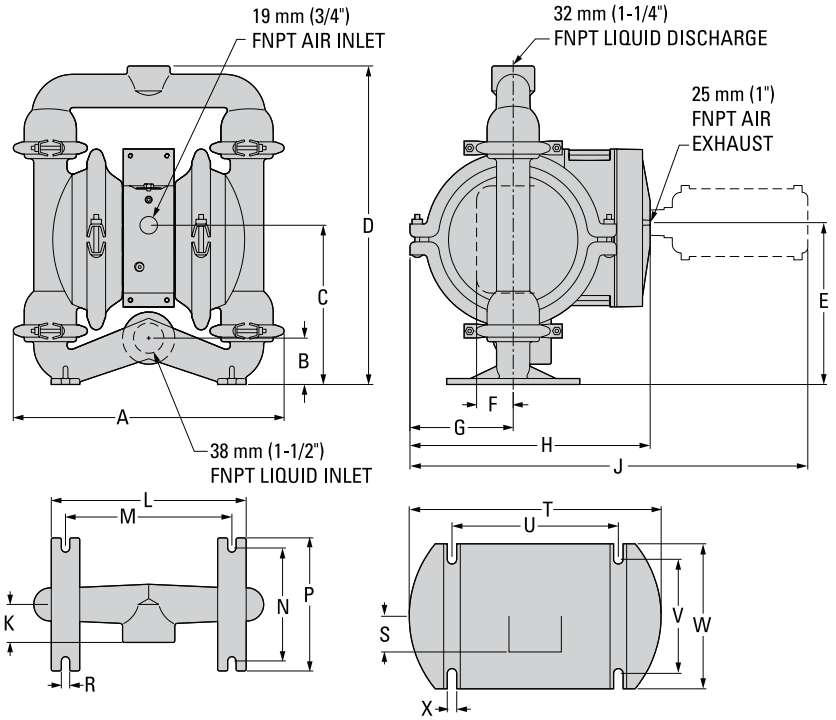

FOOTED BASE FOR STAINLESS STEEL & ALLOY C MODELS

BASE FOR ALUMINUM & CAST IRON MODELS

DIMENSIONS

ITEM	METRIC (mm)	STANDARD (inch)
A	368	14.5
B	64	2.5
C	213	8.4
D	429	16.9
E	216	8.5
F	48	1.9
G	147	5.8
H	320	12.6
J	531	20.9
K	51	2.0
L	262	10.3
M	224	8.8
N	150	5.9
P	178	7.0
R	10	0.4
S	48	1.9
T	338	13.3
U	224	8.8
V	155	6.1
W	193	7.6
X	13	0.5

PX4 Metal Saniflo[FDA]

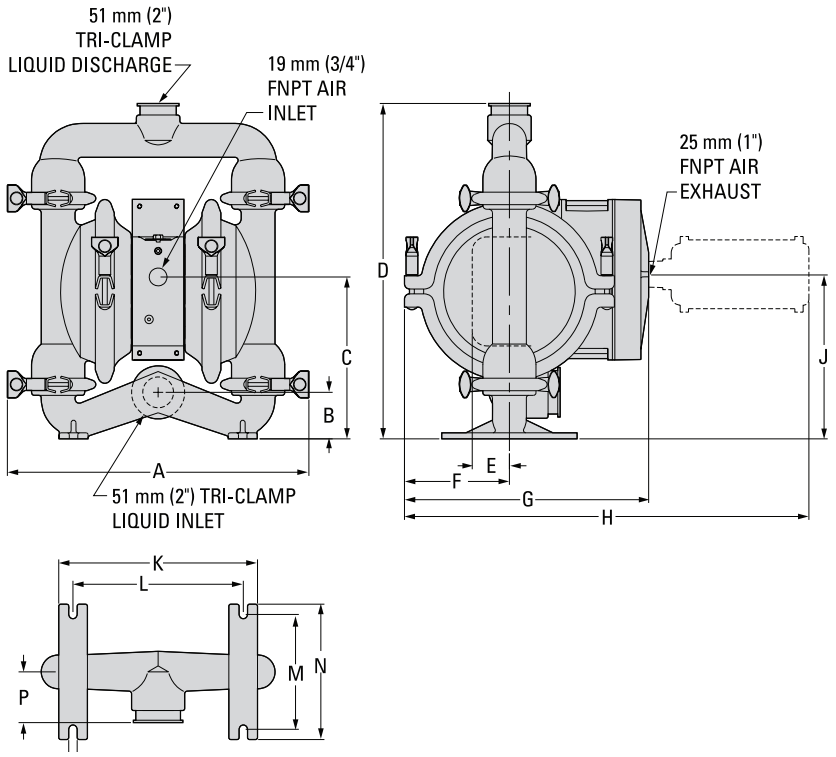

DIMENSIONS

ITEM	METRIC (mm)	STANDARD (inch)
A	396	15.6
B	64	2.5
C	213	8.4
D	442	17.4
E	48	1.9
F	147	5.8
G	320	12.6
H	531	20.9
J	216	8.5
K	262	10.3
L	208	8.2
M	152	6.0
N	178	7.0
P	69	2.8
R	10	0.4

PERFORMANCE

P4 METAL RUBBER-FITTED

Height ..... 429 mm (16.9")
Width ..... 368 mm (14.5")
Depth ..... 307 mm (12.1")
Est. Ship Weight ..... Aluminum 13 kg (29 lb)
316 Stainless Steel 20 kg (45 lb)
Cast Iron 22 kg (49 lb)
Alloy C 23 kg (51 lb)
Air Inlet ..... 19 mm (3/4")
Inlet ..... 38 mm (1-1/2")
Outlet ..... 32 mm (1-1/4")
Suction Lift ..... 5.8 m Dry (19.0')
8.0 m Wet (26.0')
Disp. per Stroke ..... 0.98 L (0.26 gal)[1]
Max. Flow Rate ..... 288 lpm (76 gpm)
Max. Size Solids ..... 4.8 mm (3/16")

[1]Displacement per stroke was calculated at 4.8 bar (70 psig) air inlet pressure against a 2.1 bar (30 psig) head pressure.

Example: To pump 102 lpm (27 gpm) against a discharge pressure head of 2.7 bar (40 psig) requires 4.1 bar (60 psig) and 22 Nm³/h (13 scfm) air consumption.

CAUTION: Do not exceed 8.6 bar (125 psig) air supply pressure.

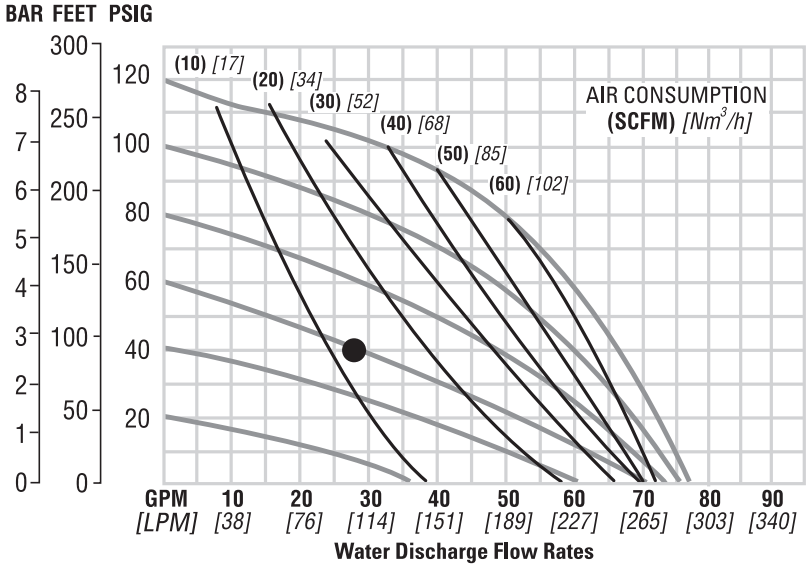

Flow rates indicated on chart were determined by pumping water.

For optimum life and performance, pumps should be specified so that daily operation parameters will fall in the center of the pump's performance curve.

P4 METAL TPE-FITTED

Height ..... 429 mm (16.9")
Width ..... 368 mm (14.5")
Depth ..... 307 mm (12.1")
Est. Ship Weight ..... Aluminum 13 kg (29 lb)
316 Stainless Steel 20 kg (45 lb)
Cast Iron 22 kg (49 lb)
Alloy C 23 kg (51 lb)
Air Inlet ..... 19 mm (3/4")
Inlet ..... 38 mm (1-1/2")
Outlet ..... 32 mm (1-1/4")
Suction Lift ..... 5.2 m (17.0' Dry)
8.8 m (29.0' Wet)
Disp. per Stroke ..... 1.1 L (0.29 gal)[1]
Max. Flow Rate ..... 307 lpm (81 gpm)
Max. Size Solids ..... 4.8 mm (3/16")

[1]Displacement per stroke was calculated at 4.8 bar (70 psig) air inlet pressure against a 2.1 bar (30 psig) head pressure.

Example: To pump 114 lpm (30 gpm) against a discharge pressure head of 2.7 bar (40 psig) requires 4.1 bar (60 psig) and 26 Nm³/h (15 scfm) air consumption.

CAUTION: Do not exceed 8.6 bar (125 psig) air supply pressure.

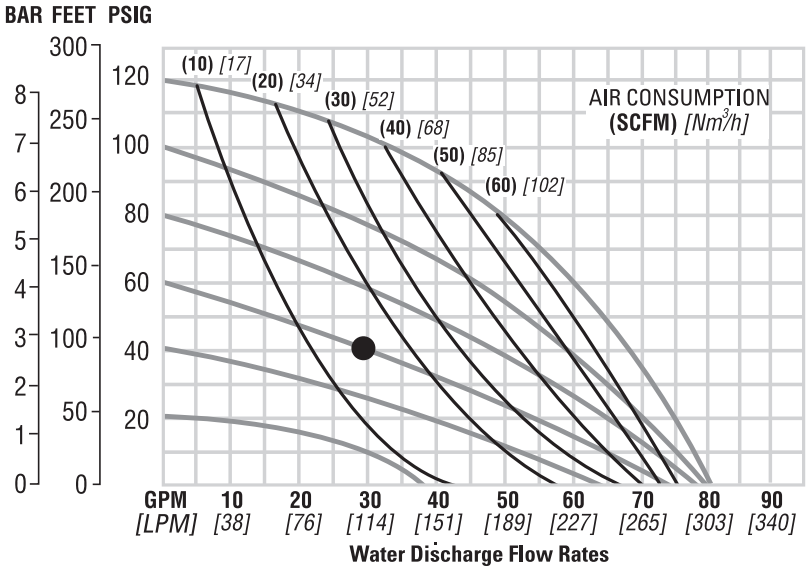

Flow rates indicated on chart were determined by pumping water.

For optimum life and performance, pumps should be specified so that daily operation parameters will fall in the center of the pump's performance curve.

P4 METAL REDUCED-STROKE PTFE-FITTED

Height ..... 429 mm (16.9")
Width ..... 368 mm (14.5")
Depth ..... 307 mm (12.1")
Est. Ship Weight ..... Aluminum 13 kg (29 lb)
316 Stainless Steel 20 kg (45 lb)
Cast Iron 22 kg (49 lb)
Alloy C 23 kg (51 lb)
Air Inlet ..... 19 mm (3/4")
Inlet ..... 38 mm (1-1/2")
Outlet ..... 32 mm (1-1/4")
Suction Lift ..... 3.7 m Dry (12')
8.5 m Wet (28')
Disp. per Stroke ..... 0.53 L (0.14 gal)[1]
Max. Flow Rate ..... 295 lpm (78 gpm)
Max. Size Solids ..... 4.8 mm (3/16")

[1]Displacement per stroke was calculated at 4.8 bar (70 psig) air inlet pressure against a 2.1 bar (30 psig) head pressure.

Example: To pump 83 lpm (22 gpm) against a discharge pressure head of 2.7 bar (40 psig) requires 4.1 bar (60 psig) and 34 Nm^3/h (20 scfm) air consumption.

CAUTION: Do not exceed 8.6 bar (125 psig) air supply pressure.

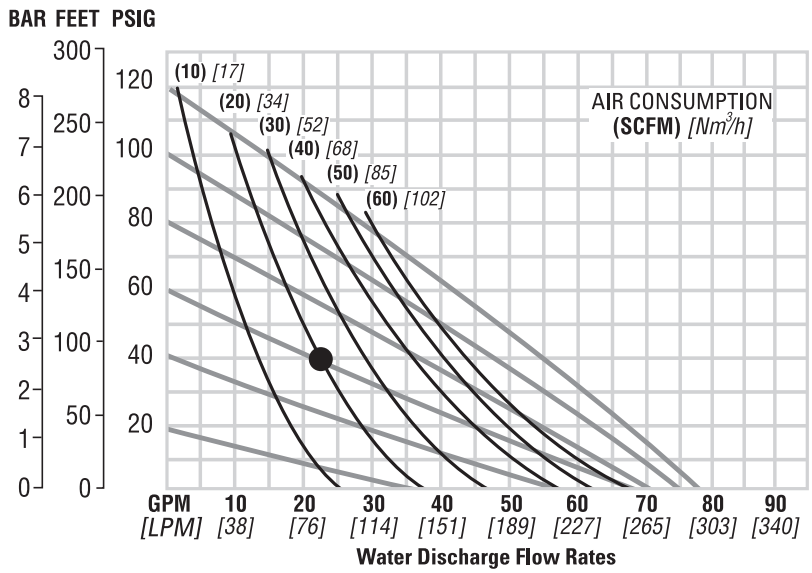

Flow rates indicated on chart were determined by pumping water.

For optimum life and performance, pumps should be specified so that daily operation parameters will fall in the center of the pump's performance curve.

P4 METAL FULL-STROKE PTFE-FITTED

Height ..... 429 mm (16.9")
Width ..... 368 mm (14.5")
Depth ..... 307 mm (12.1")
Ship Weight ..... Aluminum 13 kg (29 lb)
316 Stainless Steel 20kg (45 lb)
Cast Iron 22 kg (49 lb)
Alloy C 23 kg (51 lb)
Air Inlet ..... 13 mm (1/2")
Inlet ..... 38 mm (1-1/2")
Outlet ..... 32 mm (1-1/4")
Suction Lift ..... 6.4m Dry (21.0')
9.3 m Wet (30.6')
Disp. per Stroke ..... 1.1 L (.28 gal)[1]
Max. Flow Rate ..... 330 lpm (87.2 gpm)
Max. Size Solids ..... 4.8 mm (3/16")

[1]Displacement per stroke was calculated at 4.8 bar (70 psig) air inlet pressure against a 2.1 bar (30 psig) head pressure.

Example: To pump 257 lpm (68 gpm) against a discharge head of 1.4 bar (20 psig) requires 4.1 bar (60 psig) and 96.5 Nm^3/h (60 scfm) air consumption.

CAUTION: Do not exceed 8.6 bar (125 psig) air supply pressure.

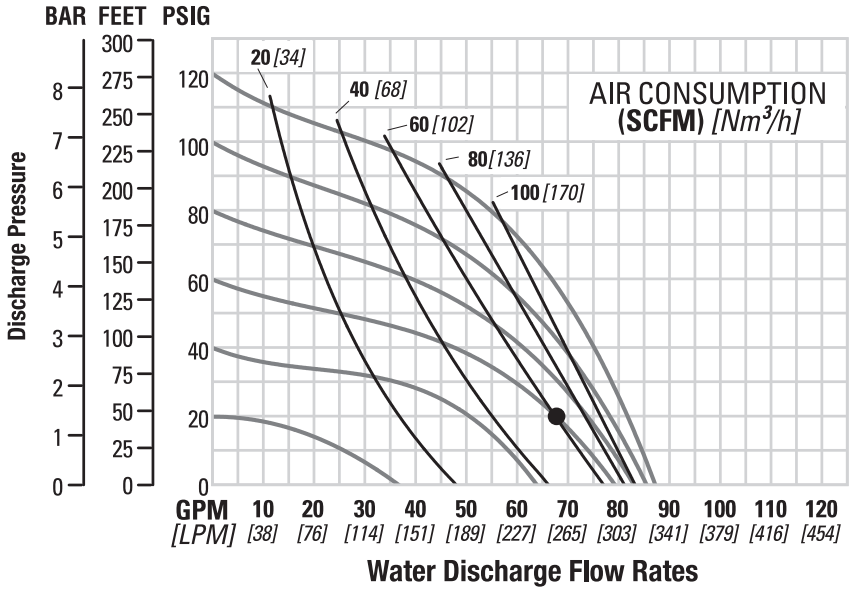

Flow rates indicated on chart were determined by pumping water.

For optimum life and performance, pumps should be specified so that daily operation parameters will fall in the center of the pump's performance curve.

PERFORMANCE

P4 METAL ULTRA-FLEX™-FITTED

Height ..... 429 mm (16.9")
Width ..... 368 mm (14.5")
Depth ..... 307 mm (12.1")
Est. Ship Weight ..... Aluminum 13 kg (29 lb)
316 Stainless Steel 20 kg (45 lb)
Cast Iron 22 kg (49 lb)
Alloy C 23 kg (51 lb)
Air Inlet ..... 13 mm (1/2")
Inlet ..... 38 mm (1-1/2")
Outlet ..... 32 mm (1-1/4")
Suction Lift ..... 5.2 m (17.0' Dry)
8.5 m Wet (28.0')
Disp. per Stroke ..... 0.76 L (0.20 gal)[1]
Max. Flow Rate ..... 269 lpm (71 gpm)
Max. Size Solids ..... 4.8 mm (3/16")

[1]Displacement per stroke was calculated at 4.8 bar (70 psig) air inlet pressure against a 2.1 bar (30 psig) head pressure.

Example: To pump 170 lpm (45 gpm) against a discharge pressure head of 2.0 bar (30 psig) requires 4.1 bar (60 psig) and 85 Nm^3/h (50 scfm) air consumption.

CAUTION: Do not exceed 8.6 bar (125 psig) air supply pressure.

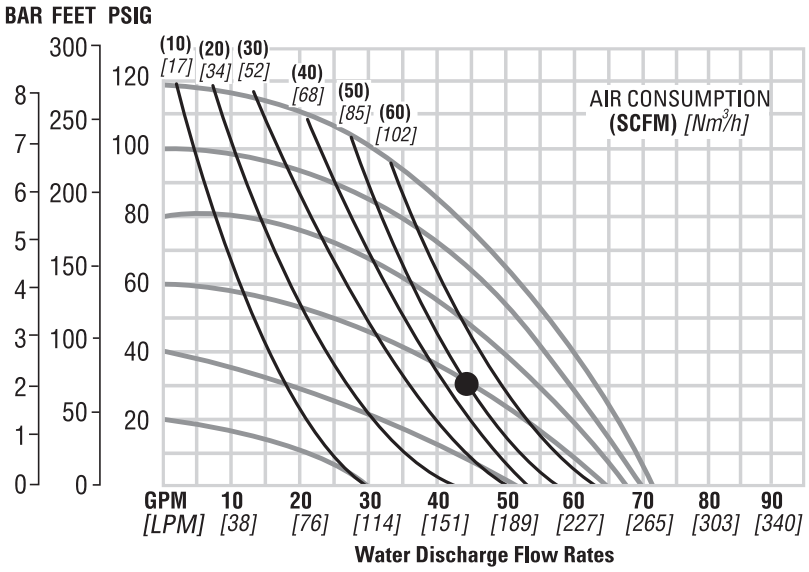

Flow rates indicated on chart were determined by pumping water.

For optimum life and performance, pumps should be specified so that daily operation parameters will fall in the center of the pump's performance curve.

SUCTION-LIFT CURVES

P4 METAL SUCTION-LIFT CAPABILITY

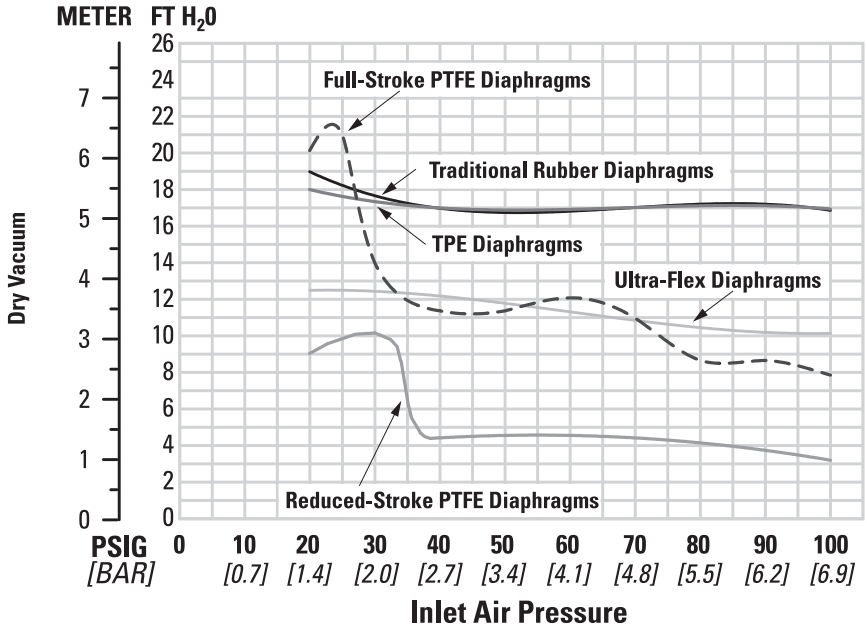

Suction-lift curves are calibrated for pumps operating at 305 m (1,000') above sea level. This chart is meant to be a guide only. There are many variables that can affect your pump's operating characteristics. The number of intake and discharge elbows, viscosity of pumping fluid, elevation (atmospheric pressure) and pipe friction loss all affect the amount of suction lift your pump will attain.

NOTES

PX4
METAL

WILDEN®
A DOVER COMPANY

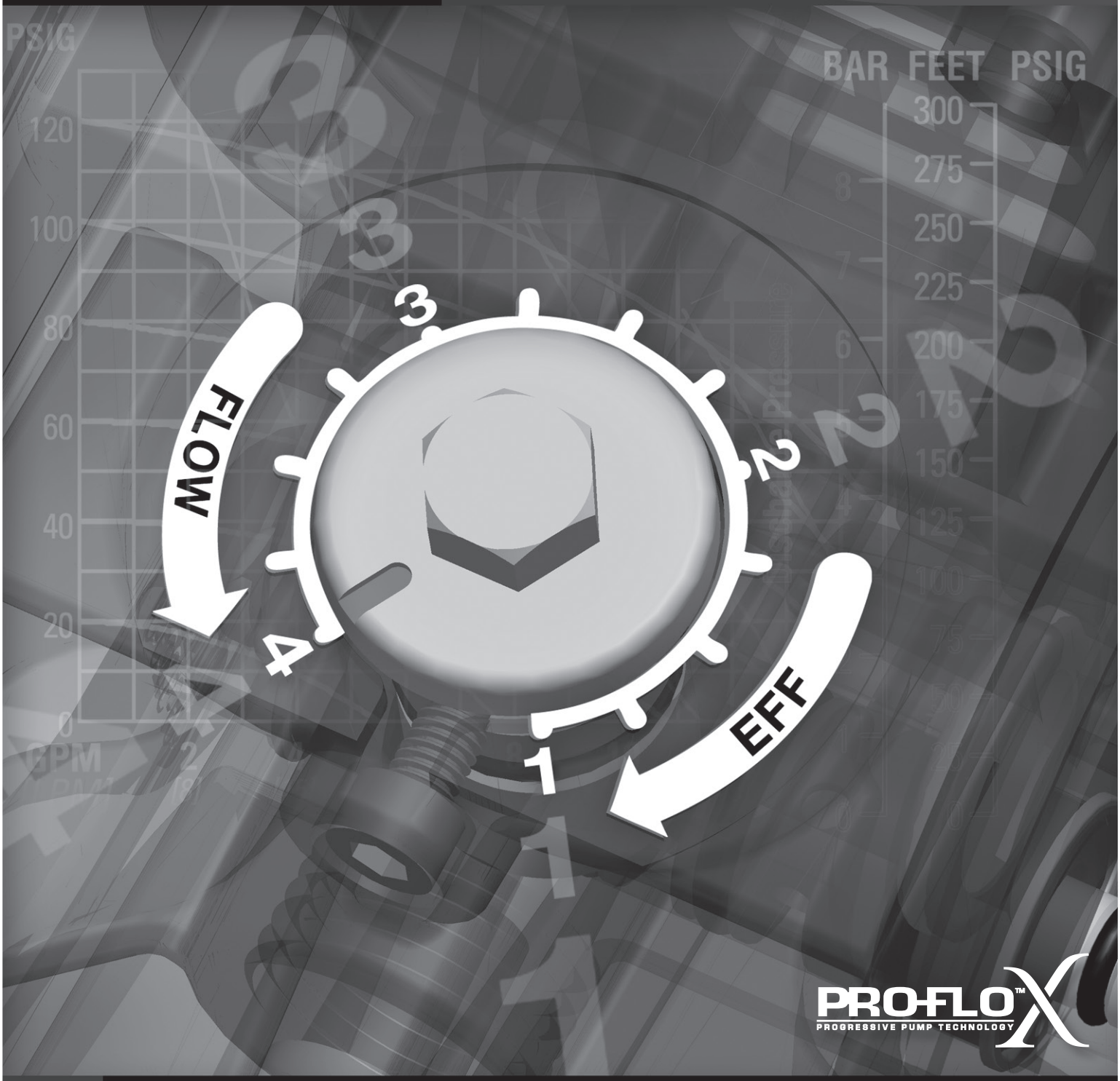

PRO-FLO™ X
PROGRESSIVE PUMP TECHNOLOGY

PX4 PERFORMANCE

Pro-Flo X™ Operating Principle

The Pro-Flo X™ air distribution system with the revolutionary Efficiency Management System (EMS) offers flexibility never before seen in the world of AODD pumps. The EMS is simple and easy to use. With the turn of an integrated control dial, the operator can select the optimal balance of flow and efficiency that best meets the application needs. Pro-Flo X™ provides higher performance, lower operational costs and flexibility that exceeds previous industry standards.

Turning the dial changes the relationship between air inlet and exhaust porting.	Each dial setting represents an entirely different flow curve.	Pro-Flo X™ pumps are shipped from the factory on setting 4, which is the highest flow rate setting possible.	Moving the dial from setting 4 causes a decrease in flow and an even greater decrease in air consumption.	When the air consumption decreases more than the flow rate, efficiency is improved and operating costs are reduced.

HOW TO USE THIS EMS CURVE

Example 1

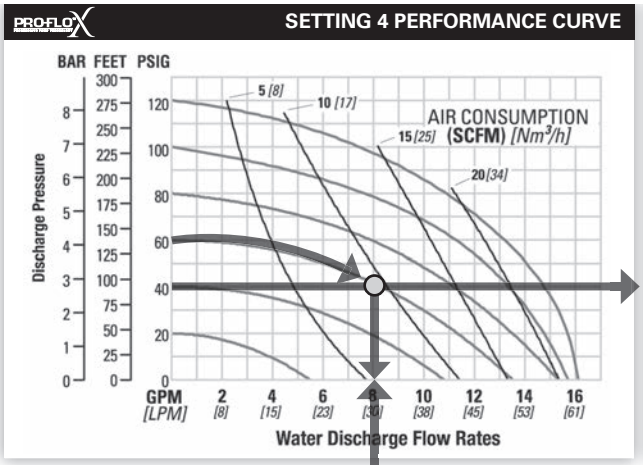

Figure 1

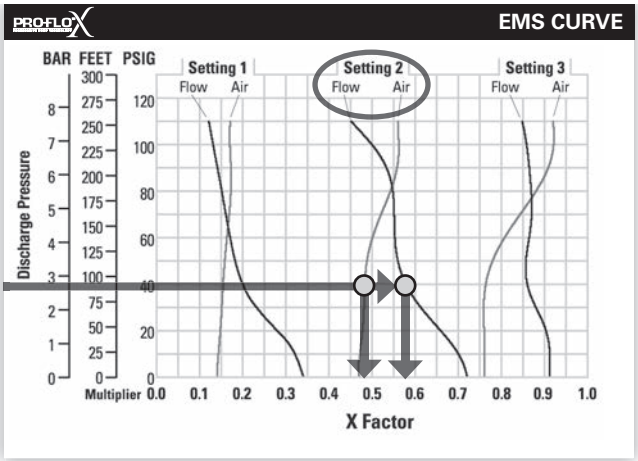

Figure 2

Example data point = 8.2 GPM

Example data point = 0.58 flow multiplier, 0.48 air multiplier

This is an example showing how to determine flow rate and air consumption for your Pro-Flo X™ pump using the Efficiency Management System (EMS) curve and the performance curve. For this example we will be using 4.1 bar (60 psig) inlet air pressure and 2.8 bar (40 psig) discharge pressure and EMS setting 2.

Step 1: ***Identifying performance at setting 4.*** Locate the curve that represents the flow rate of the pump with 4.1 bar (60 psig) air inlet pressure. Mark the point where this curve crosses the horizontal line representing 2.8 bar (40 psig) discharge pressure. (Figure 1). After locating your performance point on the flow curve, draw a vertical line downward until reaching the bottom scale on the chart. Identify the flow rate (in this case, 8.2 gpm). Observe location of performance point relative to air consumption curves and approximate air consumption value (in this case, 9.8 scfm).

Step 2: ***Determining flow and air X Factors.*** Locate your discharge pressure (40 psig) on the vertical axis of the EMS curve (Figure 2). Follow along the 2.8 bar (40 psig) horizontal line until intersecting both flow and air curves for your desired EMS setting (in this case, setting 2). Mark the points where the EMS curves intersect the horizontal discharge pressure line. After locating your EMS points on the EMS curve, draw vertical lines downward until reaching the bottom scale on the chart. This identifies the flow X Factor (in this case, 0.58) and air X Factor (in this case, 0.48).

Step 3: ***Calculating performance for specific EMS setting.*** Multiply the flow rate (8.2 gpm) obtained in Step 1 by the flow X Factor multiplier (0.58) in Step 2 to determine the flow rate at EMS setting 2. Multiply the air consumption (9.8 scfm) obtained in Step 1 by the air X Factor multiplier (0.48) in Step 2 to determine the air consumption at EMS setting 2 (Figure 3).

8.2	gpm	*(flow rate for setting 4)*
.58		*(flow X Factor setting 2)*
4.8	gpm	*(flow rate for setting 2)*
9.8	scfm	*(air consumption for setting 4)*
.48		*(air X Factor setting 2)*
4.7	scfm	*(air consumption for setting 2)*

Figure 3

The flow rate and air consumption at Setting 2 are found to be 18.2 lpm (4.8 gpm) and 7.9 Nm³/h (4.7 scfm) respectively.

Example 2.1

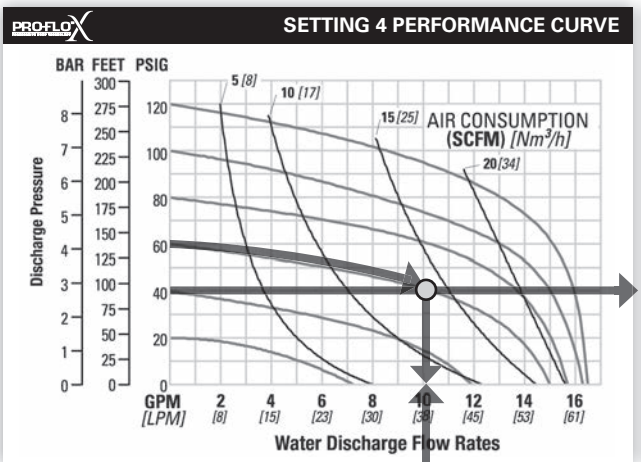

Figure 4

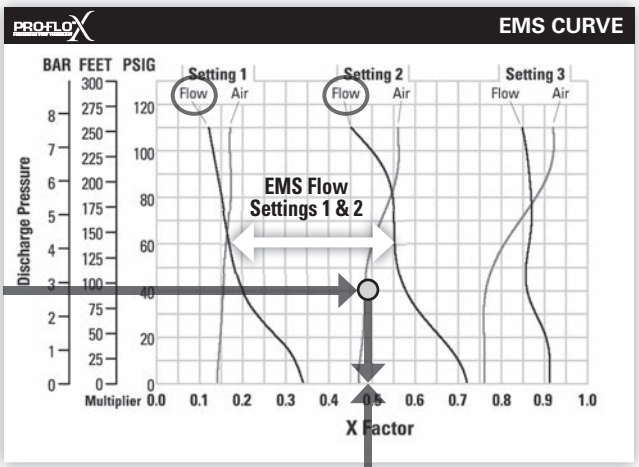

Figure 5

Example data point = **10.2** gpm

0.49 flow multiplier

This is an example showing how to determine the inlet air pressure and the EMS setting for your Pro-Flo X™ pump to optimize the pump for a specific application. For this example we will be using an application requirement of 18.9 lpm (5 gpm) flow rate against 2.8 bar (40 psig) discharge pressure. This example will illustrate how to calculate the air consumption that could be expected at this operational point.

DETERMINE EMS SETTING

Step 1*: **Establish inlet air pressure.*** Higher air pressures will typically allow the pump to run more efficiently, however, available plant air pressure can vary greatly. If an operating pressure of 6.9 bar (100 psig) is chosen when plant air frequently dips to 6.2 bar (90 psig) pump performance will vary. Choose an operating pressure that is within your compressed air systems capabilities. For this example we will choose 4.1 bar (60 psig).

Step 2*: **Determine performance point at setting 4.*** For this example an inlet air pressure of 4.1 bar (60 psig) inlet air pressure has been chosen. Locate the curve that represents the performance of the pump with 4.1 bar (60 psig) inlet air pressure. Mark the point where this curve crosses the horizontal line representing 2.8 bar (40 psig) discharge pressure. After locating this point on the flow curve, draw a vertical line downward until reaching the bottom scale on the chart and identify the flow rate. In our example it is 38.6 lpm (10.2 gpm). This is the setting 4 flow rate. Observe the location of the performance point relative to air consumption curves and approximate air consumption value. In our example, setting 4 air consumption is 24 Nm³/h (14 scfm). (See Figure 4.)

Step 3*: **Determine flow X Factor.*** Divide the required flow rate 18.9 lpm (5 gpm) by the setting 4 flow rate 38.6 lpm (10.2 gpm) to determine the flow X Factor for the application.

5 gpm / 10.2 gpm = 0.49 (flow X Factor)

Step 4*: **Determine EMS setting from the flow X Factor.*** Plot the point representing the flow X Factor (0.49) and the application discharge pressure 2.8 bar (40 psig) on the EMS curve. This is done by following the horizontal 2.8 bar (40 psig) psig discharge pressure line until it crosses the vertical 0.49 X Factor line. Typically, this point lies between two flow EMS setting curves (in this case, the point lies between the flow curves for EMS setting 1 and 2). Observe the location of the point relative to the two curves it lies between and approximate the EMS setting (Figure 5). For more precise results you can mathematically interpolate between the two curves to determine the optimal EMS setting.

For this example the EMS setting is 1.8.

Example 2.2

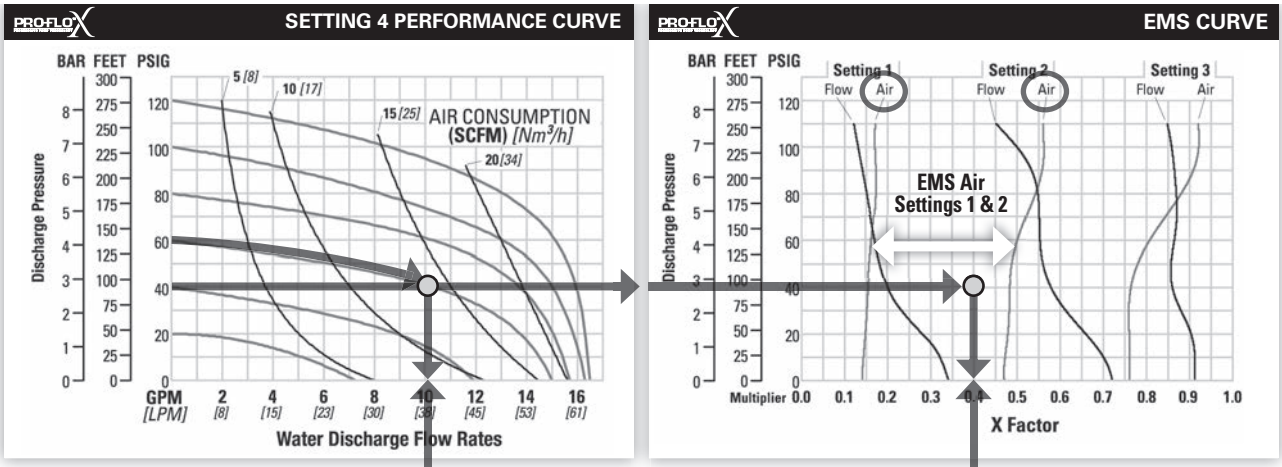

Figure 6 *Figure 7*

Example data point = 10.2 gpm **Example data point = 0.40 air multiplier**

Determine air consumption at a specific EMS setting.

Step 1*: **Determine air X Factor.*** In order to determine the air X Factor, identify the two air EMS setting curves closest to the EMS setting established in example 2.1 (in this case, the point lies between the air curves for EMS setting 1 and 2). The point representing your EMS setting (1.8) must be approximated and plotted on the EMS curve along the horizontal line representing your discharge pressure (in this case, 40 psig). This air point is different than the flow point plotted in example 2.1. After estimating (or interpolating) this point on the curve, draw a vertical line downward until reaching the bottom scale on the chart and identify the air X Factor (Figure 7).

For this example the air X Factor is **0.40.**

Step 2*: **Determine air consumption.*** Multiply your setting 4 air consumption (14 scfm) value by the air X Factor obtained above (0.40) to determine your actual air consumption.

14 scfm x **0.40** = 5.6 SCFM

In summary, for an application requiring 18.9 lpm (5 gpm) against 2.8 bar (40 psig) discharge pressure, the pump inlet air pressure should be set to 4.1 bar (60 psig) and the EMS dial should be set to 1.8. The pump would then consume 9.5 Nm^3/h (5.6 scfm) of compressed air.

PX4 METAL – RUBBER-FITTED

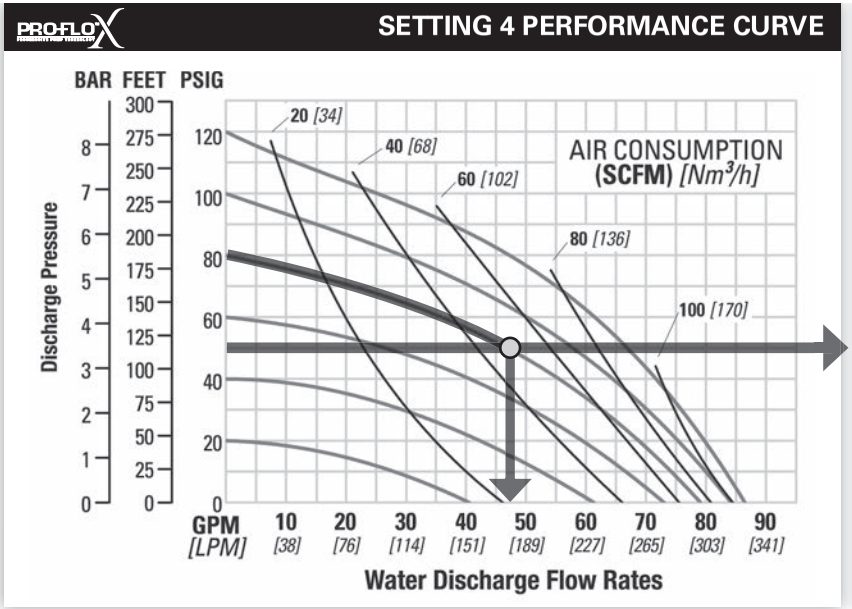

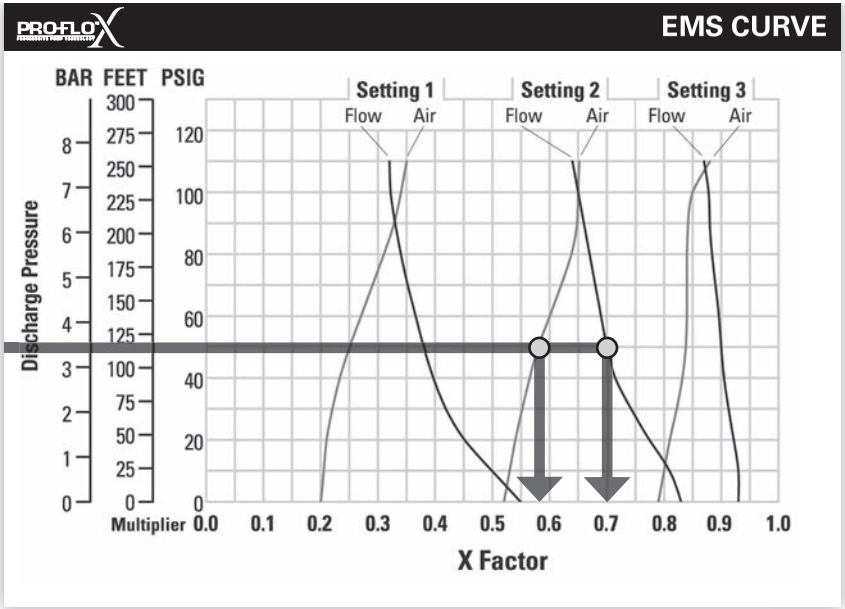

TECHNICAL DATA

Height .....429 mm (16.9")
Width.....368 mm (14.5")
Depth.....320 mm (12.6")
Ship Weight .....Aluminum 21 kg (46 lb)
316 Stainless Steel 28 kg (62 lb)
Cast Iron 30 kg (66 lb)
Air Inlet..... 19 mm (3/4")
Inlet .....38 mm (1-1/2")
Outlet.....32 mm (1-1/4")
Suction Lift.....6.9 m Dry (22.7')
9.3 m Wet (30.6')
Disp. per Stroke..... 1.02 L (0.27 gal)[1]
Max. Flow Rate .....327 lpm (87 gpm)
Max. Size Solids ..... 4.8 mm (3/16")

[1]Displacement per stroke was calculated at 4.8 bar (70 psig) air inlet pressure against a 2.1 bar (30 psig) head pressure.

The Efficiency Management System (EMS) can be used to optimize the performance of your Wilden pump for specific applications. The pump is delivered with the EMS adjusted to setting 4, which allows maximum flow.

The EMS curve allows the pump user to determine flow and air consumption at each EMS setting. For any EMS setting and discharge pressure, the X factor is used as a multiplier with the original values from the setting 4 performance curve to calculate the actual flow and air consumption values for that specific EMS setting. NOTE: You can interpolate between the setting curves for operation at intermediate EMS settings.

The Efficiency Management System (EMS) can be used to optimize the performance of your Wilden pump for specific applications. The pump is delivered with the EMS adjusted to setting 4, which allows maximum flow.

EXAMPLE

A PX4 metal, rubber-fitted pump operating at EMS setting 4, achieved a flow rate of 178 lpm (47 gpm) using 82 Nm^3/h (48 scfm) of air when run at 5.5 bar (80 psig) air inlet pressure and 3.4 bar (50 psig) discharge pressure (see dot on performance curve).

The end user did not require that much flow and wanted to reduce air consumption at his facility. He determined that EMS setting 2 would meet his needs. At 3.4 bar (50 psig) discharge pressure and EMS setting 2, the flow X factor is 0.70 and the air X factor is 0.58 (see dots on EMS curve).

Multiplying the original setting 4 values by the X factors provides the setting 2 flow rate of 125 lpm (33 gpm) and an air consumption of 47 Nm^3/h (28 scfm). The flow rate was reduced by 30% while the air consumption was reduced by 42%, thus providing increased efficiency.

For a detailed example for how to set your EMS, see beginning of performance curve section.

CAUTION: Do not exceed 8.6 bar (125 psig) air supply pressure.

PX4 METAL – TPE-FITTED

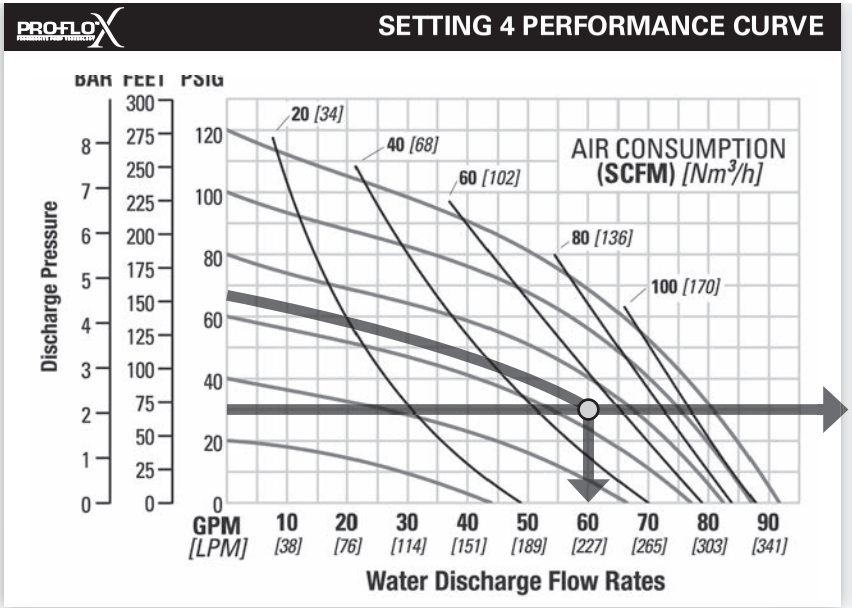

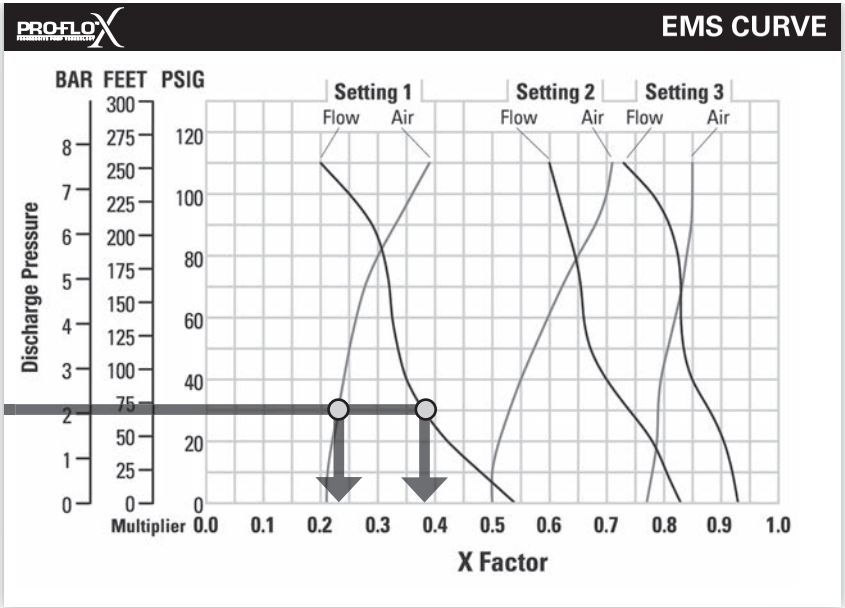

TECHNICAL DATA

Height . . . . . .429 mm (16.9")
Width. . . . . .368 mm (14.5")
Depth. . . . . .320 mm (12.6")
Ship Weight . . . . . .Aluminum 21 kg (46 lb)
316 Stainless Steel 28 kg (62 lb)
Cast Iron 30 kg (66 lb)
Air Inlet. . . . . 19 mm (3/4")
Inlet . . . . . .38 mm (1-1/2")
Outlet. . . . . .32 mm (1-1/4")
Suction Lift. . . . . .6.0 m Dry (19.7')
9.3 m Wet (30.6')
Disp. per Stroke. . . . . 1.10 L (0.29 gal)[1]
Max. Flow Rate . . . . . .347 lpm (92 gpm)
Max. Size Solids . . . . . 4.8 mm (3/16")

[1]Displacement per stroke was calculated at 4.8 bar (70 psig) air inlet pressure against a 2.1 bar (30 psig) head pressure.

The Efficiency Management System (EMS) can be used to optimize the performance of your Wilden pump for specific applications. The pump is delivered with the EMS adjusted to setting 4, which allows maximum flow.

The EMS curve allows the pump user to determine flow and air consumption at each EMS setting. For any EMS setting and discharge pressure, the X factor is used as a multiplier with the original values from the setting 4 performance curve to calculate the actual flow and air consumption values for that specific EMS setting. NOTE: You can interpolate between the setting curves for operation at intermediate EMS settings.

The Efficiency Management System (EMS) can be used to optimize the performance of your Wilden pump for specific applications. The pump is delivered with the EMS adjusted to setting 4, which allows maximum flow.

EXAMPLE

A PX4 metal, TPE-fitted pump operating at EMS setting 4, achieved a flow rate of 227 lpm (60 gpm) using 90 Nm³/h (53 scfm) of air when run at 4.6 bar (67 psig) air inlet pressure and 2.1 bar (30 psig) discharge pressure (see dot on performance curve).

The end user did not require that much flow and wanted to reduce air consumption at his facility. He determined that EMS setting 1 would meet his needs. At 2.1 bar (30 psig) discharge pressure and EMS setting 1, the flow X factor is 0.38 and the air X factor is 0.23 (see dots on EMS curve).

Multiplying the original setting 4 values by the X factors provides the setting 1 flow rate of 86 lpm (23 gpm) and an air consumption of 21 Nm³/h (12 scfm). The flow rate was reduced by 62% while the air consumption was reduced by 77%, thus providing increased efficiency.

For a detailed example for how to set your EMS, see beginning of performance curve section.

CAUTION: Do not exceed 8.6 bar (125 psig) air supply pressure.

PX4 METAL – REDUCED-STROKE PTFE-FITTED

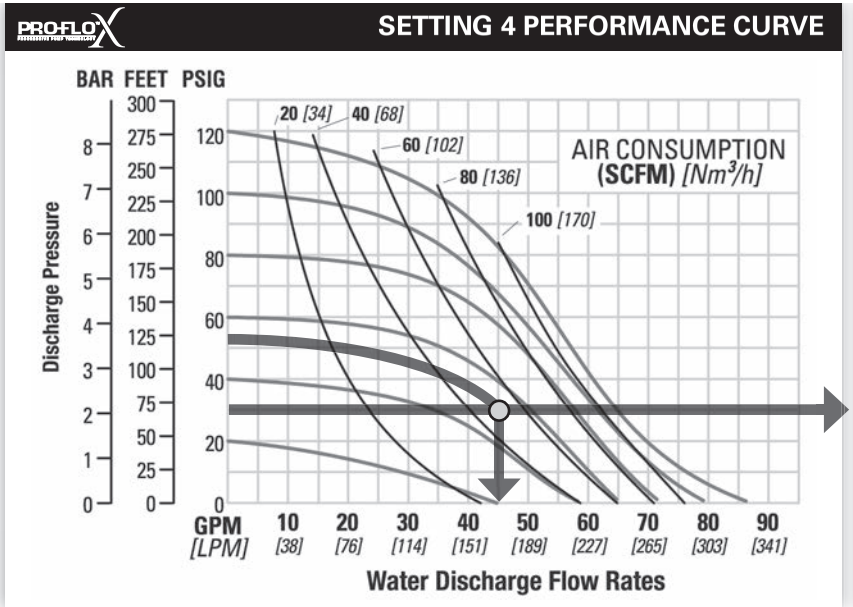

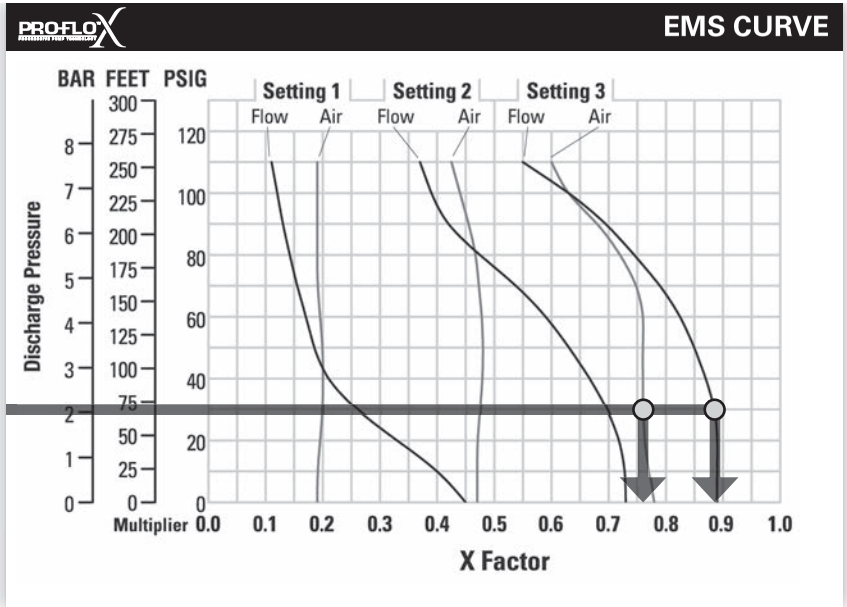

TECHNICAL DATA

Height ..... .429 mm (16.9")
Width..... .368 mm (14.5")
Depth..... .320 mm (12.6")
Ship Weight ..... .Aluminum 21 kg (46 lb)
316 Stainless Steel 28 kg (62 lb)
Cast Iron 30 kg (66 lb)
Air Inlet ..... 19 mm (3/4")
Inlet ..... .38 mm (1-1/2")
Outlet..... .32 mm (1-1/4")
Suction Lift ..... .4.0 m Dry (13.1')
9.2 m Wet (30.1')
Disp. per Stroke..... 0.53 L (0.14 gal)[1]
Max. Flow Rate ..... 327 lpm (87 gpm)
Max. Size Solids ..... .4.8 mm (3/16")

[1]Displacement per stroke was calculated at 4.8 bar (70 psig) air inlet pressure against a 2.1 bar (30 psig) head pressure.

The Efficiency Management System (EMS) can be used to optimize the performance of your Wilden pump for specific applications. The pump is delivered with the EMS adjusted to setting 4, which allows maximum flow.

The EMS curve allows the pump user to determine flow and air consumption at each EMS setting. For any EMS setting and discharge pressure, the X factor is used as a multiplier with the original values from the setting 4 performance curve to calculate the actual flow and air consumption values for that specific EMS setting. NOTE: You can interpolate between the setting curves for operation at intermediate EMS settings.

The Efficiency Management System (EMS) can be used to optimize the performance of your Wilden pump for specific applications. The pump is delivered with the EMS adjusted to setting 4, which allows maximum flow.

EXAMPLE

A PX4 metal, reduced-stroke PTFE-fitted pump operating at EMS setting 4, achieved a flow rate of 170 lpm (45 gpm) using 85 Nm^3/h (50 scfm) of air when run at 3.6 bar (52 psig) air inlet pressure and 2.1 bar (30 psig) discharge pressure (see dot on performance curve).

The end user did not require that much flow and wanted to reduce air consumption at his facility. He determined that EMS setting 3 would meet his needs. At 2.1 bar (30 psig) discharge pressure and EMS setting 3, the flow X factor is 0.88 and the air X factor is 0.76 (see dots on EMS curve).

Multiplying the original setting 4 values by the X factors provides the setting 3 flow rate of 150 lpm (40 gpm) and an air consumption of 65 Nm^3/h (38 scfm). The flow rate was reduced by 12% while the air consumption was reduced by 24%, thus providing increased efficiency.

For a detailed example for how to set your EMS, see beginning of performance curve section.

CAUTION: Do not exceed 8.6 bar (125 psig) air supply pressure.

PX4 METAL FULL-STROKE PTFE-FITTED

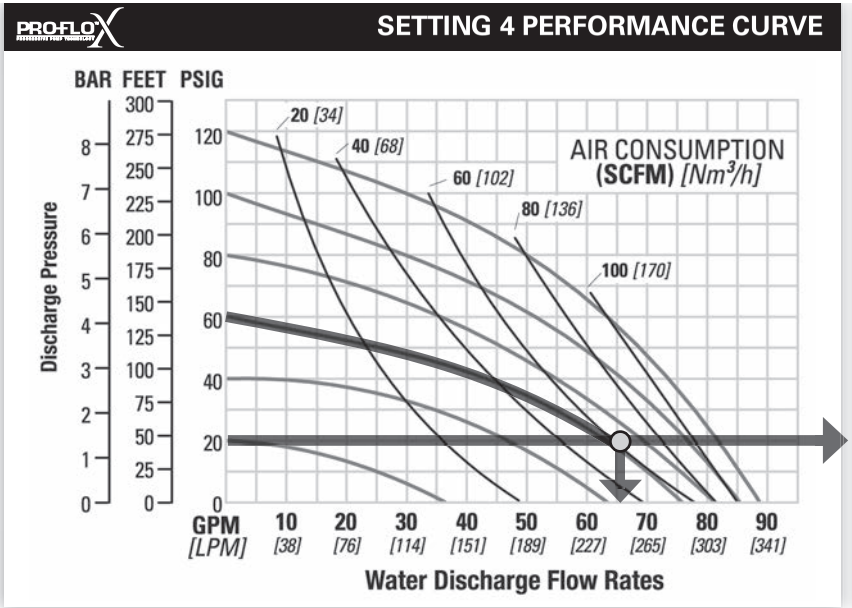

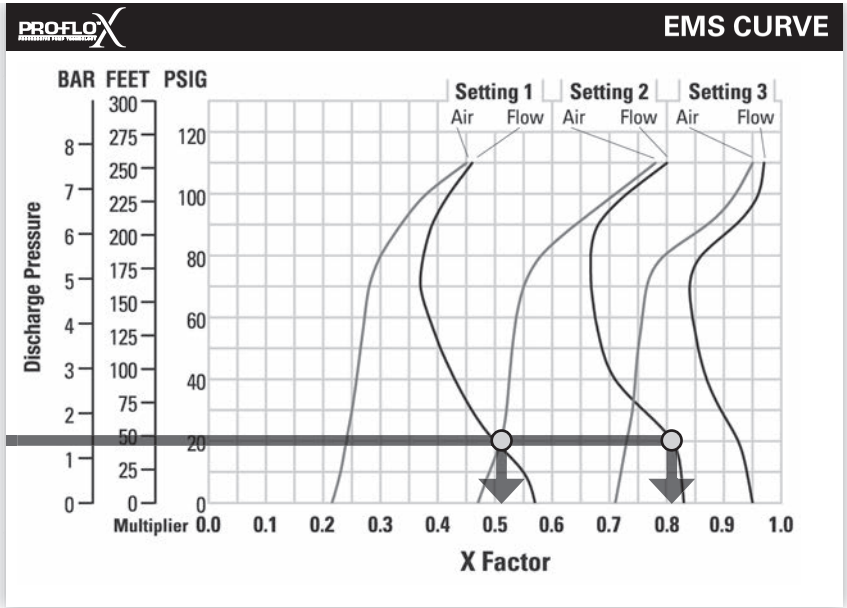

TECHNICAL DATA

Height . . . . . .429 mm (16.9")
Width. . . . . .368 mm (14.5")
Depth. . . . . .320 mm (12.6")
Ship Weight . . . . . .Aluminum 21 kg (46 lb)
316 Stainless Steel 28kg (62 lb)
Cast Iron 30 kg (66 lb)
Air Inlet . . . . . 19 mm (3/4")
Inlet . . . . . .38 mm (1-1/2")
Outlet. . . . . .32 mm (1-1/4")
Suction Lift . . . . . 6.7m Dry (22.1')
9.3 m Wet (30.6')
Disp. per Stroke. . . . . 1.0 L (.26 gal)[1]
Max. Flow Rate . . . . . 336 lpm (88.7 gpm)
Max. Size Solids . . . . . 4.8 mm (3/16")

[1]Displacement per stroke was calculated at 4.8 bar (70 psig) air inlet pressure against a 2.1 bar (30 psig) head pressure.

The Efficiency Management System (EMS) can be used to optimize the performance of your Wilden pump for specific applications. The pump is delivered with the EMS adjusted to setting 4, which allows maximum flow.

The EMS curve allows the pump user to determine flow and air consumption at each EMS setting. For any EMS setting and discharge pressure, the X factor is used as a multiplier with the original values from the setting 4 performance curve to calculate the actual flow and air consumption values for that specific EMS setting. NOTE: You can interpolate between the setting curves for operation at intermediate EMS settings.

The Efficiency Management System (EMS) can be used to optimize the performance of your Wilden pump for specific applications. The pump is delivered with the EMS adjusted to setting 4, which allows maximum flow.

EXAMPLE

A PX4 metal, full-stroke PTFE-fitted pump operating at EMS setting 4, achieved a flow rate of 257 lpm (66 gpm) using 102 Nm^3/h (60 scfm) of air when run at 4.1 bar (60 psig) air inlet pressure and 1.4 bar (20 psig) discharge pressure (see dot on performance curve).

The end user did not require that much flow and wanted to reduce air consumption at his facility. He determined that EMS setting 2 would meet his needs. At 1.4 bar (20 psig) discharge pressure and EMS setting 2, the flow X factor is 0.88 and the air X factor is 0.49 (see dots on EMS curve).

Multiplying the original setting 4 values by the X factors provides the setting 2 flow rate of 211 lpm (56 gpm) and an air consumption of 50 Nm^3/h (29 scfm). The flow rate was reduced by 18% while the air consumption was reduced by 51%, thus providing increased efficiency.

For a detailed example for how to set your EMS, see beginning of performance curve section.

CAUTION: Do not exceed 8.6 bar (125 psig) air supply pressure.

PX4 METAL – ULTRA-FLEX™

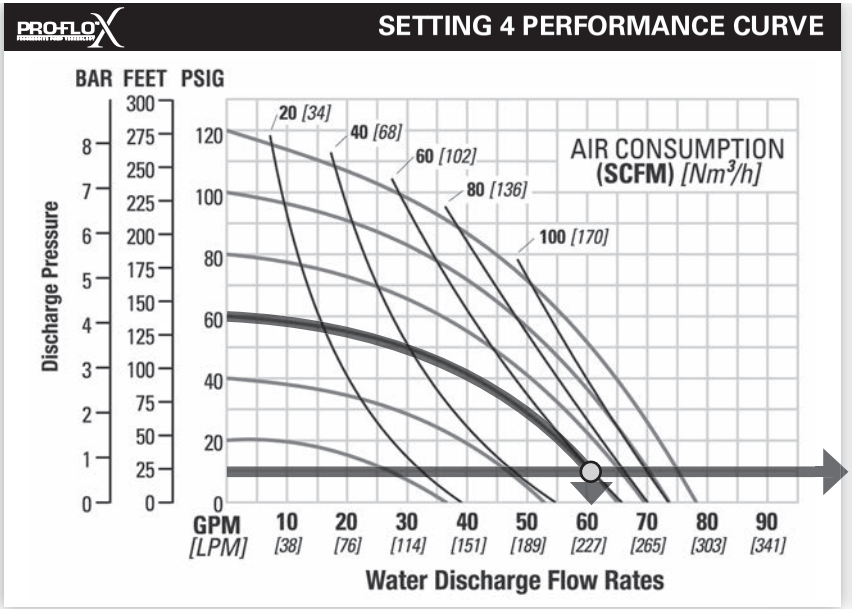

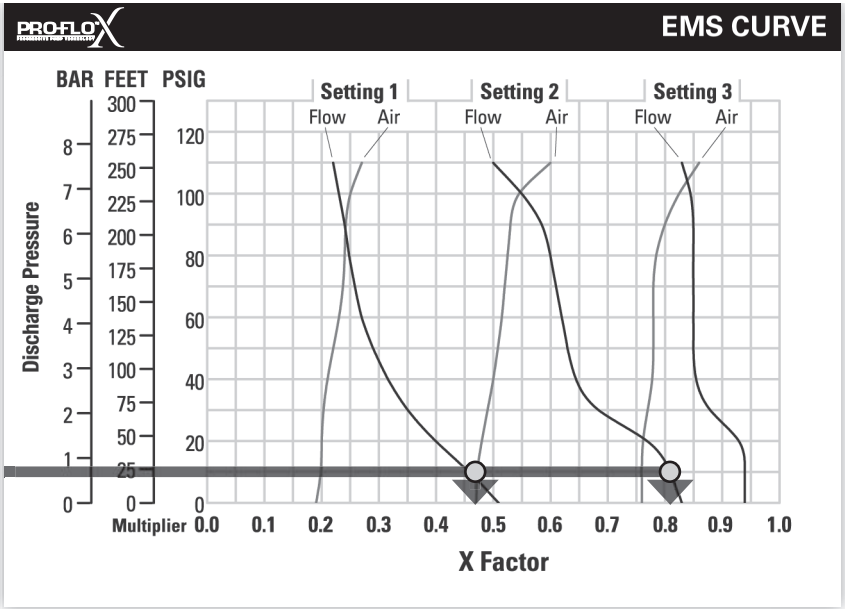

TECHNICAL DATA

Height .....429 mm (16.9")
Width.....368 mm (14.5")
Depth.....320 mm (12.6")
Ship Weight .....Aluminum 21 kg (46 lb)
316 Stainless Steel 28 kg (62 lb)
Cast Iron 30 kg (66 lb)
Air Inlet..... 19 mm (3/4")
Inlet .....38 mm (1-1/2")
Outlet.....32 mm (1-1/4")
Suction Lift.....6.2 m Dry (20.4')
9.3 m Wet (30.6')
Disp. per Stroke..... 0.76 L (0.20 gal)[1]
Max. Flow Rate .....295 lpm (78 gpm)
Max. Size Solids ..... 4.8 mm (3/16")

[1]Displacement per stroke was calculated at 4.8 bar (70 psig) air inlet pressure against a 2.1 bar (30 psig) head pressure.

The Efficiency Management System (EMS) can be used to optimize the performance of your Wilden pump for specific applications. The pump is delivered with the EMS adjusted to setting 4, which allows maximum flow.

The EMS curve allows the pump user to determine flow and air consumption at each EMS setting. For any EMS setting and discharge pressure, the X factor is used as a multiplier with the original values from the setting 4 performance curve to calculate the actual flow and air consumption values for that specific EMS setting. NOTE: You can interpolate between the setting curves for operation at intermediate EMS settings.

The Efficiency Management System (EMS) can be used to optimize the performance of your Wilden pump for specific applications. The pump is delivered with the EMS adjusted to setting 4, which allows maximum flow.

EXAMPLE

A PX4 metal, Ultra-Flex-fitted pump operating at EMS setting 4, achieved a flow rate of 231 lpm (61 gpm) using 102 Nm^3/h (60 scfm) of air when run at 4.1 bar (60 psig) air inlet pressure and 0.7 bar (10 psig) discharge pressure (see dot on performance curve).

The end user did not require that much flow and wanted to reduce air consumption at his facility. He determined that EMS setting 2 would meet his needs. At 0.7 bar (10 psig) discharge pressure and EMS setting 2, the flow X factor is 0.81 and the air X factor is 0.47 (see dots on EMS curve).

Multiplying the original setting 4 values by the X factors provides the setting 2 flow rate of 187 lpm (49 gpm) and an air consumption of 48 Nm^3/h (28 scfm). The flow rate was reduced by 19% while the air consumption was reduced by 53%, thus providing increased efficiency.

For a detailed example for how to set your EMS, see beginning of performance curve section.

CAUTION: Do not exceed 8.6 bar (125 psig) air supply pressure.

PX4 METAL SUCTION-LIFT CAPABILITY

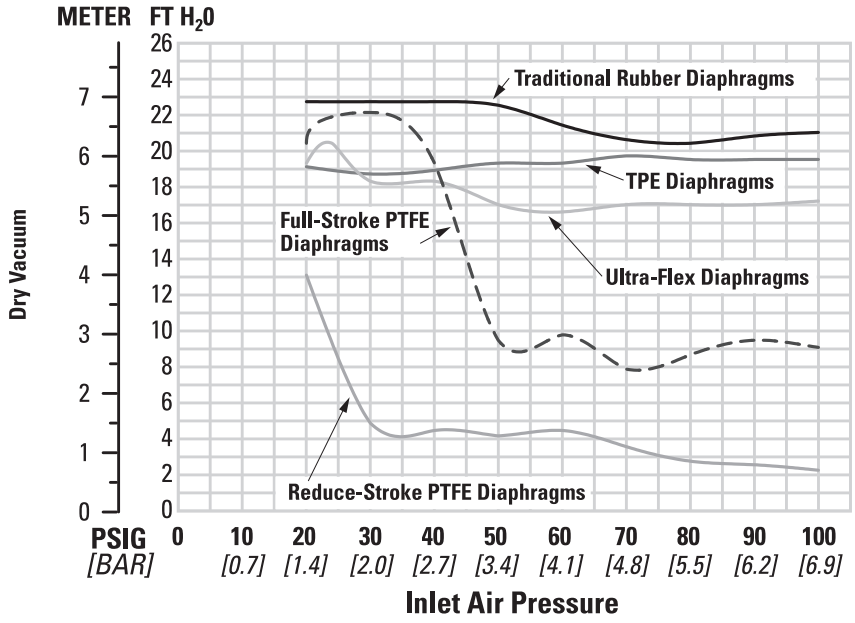

Suction-lift curves are calibrated for pumps operating at 305 m (1,000') above sea level. This chart is meant to be a guide only. There are many variables that can affect your pump's operating characteristics. The number of intake and discharge elbows, viscosity of pumping fluid, elevation (atmospheric pressure) and pipe friction loss all affect the amount of suction lift your pump will attain.

NOTES

SUGGESTED INSTALLATION

Wilden pumps are designed to meet the performance requirements of even the most demanding pumping applications. They have been designed and manufactured to the highest standards and are available in a variety of liquid path materials to meet your chemical resistance needs. Refer to the performance section of this manual for an in-depth analysis of the performance characteristics of your pump. Wilden offers the widest variety of elastomer options in the industry to satisfy temperature, chemical compatibility, abrasion resistance and flex concerns.

The suction pipe size should be at least the equivalent or larger than the diameter size of the suction inlet on your Wilden pump. The suction hose must be non-collapsible, reinforced type as these pumps are capable of pulling a high vacuum. Discharge piping should also be the equivalent or larger than the diameter of the pump discharge which will help reduce friction losses. It is critical that all fittings and connections are airtight or a reduction or loss of pump suction capability will result.

INSTALLATION: Months of careful planning, study, and selection efforts can result in unsatisfactory pump performance if installation details are left to chance.

Premature failure and long-term dissatisfaction can be avoided if reasonable care is exercised throughout the installation process.

LOCATION: Noise, safety and other logistical factors usually dictate where equipment will be situated on the production floor. Multiple installations with conflicting requirements can result in congestion of utility areas, leaving few choices for additional pumps.

Within the framework of these and other existing conditions, every pump should be located in such a way that the following key factors are balanced against each other to maximum advantage.

ACCESS: First of all, the location should be accessible. If it's easy to reach the pump, maintenance personnel will have an easier time carrying out routine inspections and adjustments. Should major repairs become necessary, ease of access can play a key role in speeding the repair process and reducing total downtime.

AIR SUPPLY: Every pump location should have an air line large enough to supply the volume of air necessary to achieve the desired pumping rate. Use air pressure up to a maximum of 8.6 bar (125 psig) depending on pumping requirements.

For best results, the pumps should use a 5µ (micron) air filter and regulator. The use of an air filter before the pump will ensure that the majority of any pipeline contaminants will be eliminated.

SOLENOID OPERATION: When operation is controlled by a solenoid valve in the air line, three-way valves should be used. This valve allows trapped air between the valve and the pump to bleed off which improves pump performance. Pumping volume can be estimated by counting the number of strokes per minute and then multiplying the figure by the displacement per stroke.

MUFFLER: Sound levels are reduced below OSHA specifications using the standard Wilden muffler. Other mufflers can be used to further reduce sound levels, but they usually reduce pump performance.

ELEVATION: Selecting a site that is well within the pump's dynamic lift capability will assure that loss-of-prime issues will be eliminated. In addition, pump efficiency can be adversely affected if proper attention is not given to site location.

PIPING: Final determination of the pump site should not be made until the piping challenges of each possible location have been evaluated. The impact of current and future installations should be considered ahead of time to make sure that inadvertent restrictions are not created for any remaining sites.

The best choice possible will be a site involving the shortest and straightest hook-up of suction and discharge piping. Unnecessary elbows, bends, and fittings should be avoided. Pipe sizes should be selected to keep friction losses within practical limits. All piping should be supported independently of the pump. In addition, the piping should be aligned to avoid placing stress on the pump fittings.

Flexible hose can be installed to aid in absorbing the forces created by the natural reciprocating action of the pump. If the pump is to be bolted down to a solid location, a mounting pad placed between the pump and the foundation will assist in minimizing pump vibration. Flexible connections between the pump and rigid piping will also assist in minimizing pump vibration. If quick-closing valves are installed at any point in the discharge system, or if pulsation within a system becomes a problem, a surge suppressor (SD Equalizer®) should be installed to protect the pump, piping and gauges from surges and water hammer.

If the pump is to be used in a self-priming application, make sure that all connections are airtight and that the suction lift is within the model's ability. NOTE: Materials of construction and elastomer material have an effect on suction lift parameters. Please refer to the performance section for specifics.

When pumps are installed in applications involving flooded suction or suction head pressures, a gate valve should be installed in the suction line to permit closing of the line for pump service.

Pumps in service with a positive suction head are most efficient when inlet pressure is limited to 0.5–0.7 bar (7–10 psig). Premature diaphragm failure may occur if positive suction is 0.7 bar (10 psig) and higher.

SUBMERSIBLE APPLICATIONS: Pro-Flo X™ pumps can be used for submersible applications, when using the Pro-Flo X™ submersible option. Turbo-Flo™ pumps can also be used for submersible applications.

NOTE: Pro-Flo® and Accu-Flo™ pumps are not submersible.

ALL WILDEN PUMPS ARE CAPABLE OF PASSING SOLIDS. A STRAINER SHOULD BE USED ON THE PUMP INTAKE TO ENSURE THAT THE PUMP'S RATED SOLIDS CAPACITY IS NOT EXCEEDED.

CAUTION: DO NOT EXCEED 8.6 BAR (125 PSIG) AIR SUPPLY PRESSURE.

SUGGESTED INSTALLATION

This illustration is a generic representation of an air-operated double-diaphragm pump.

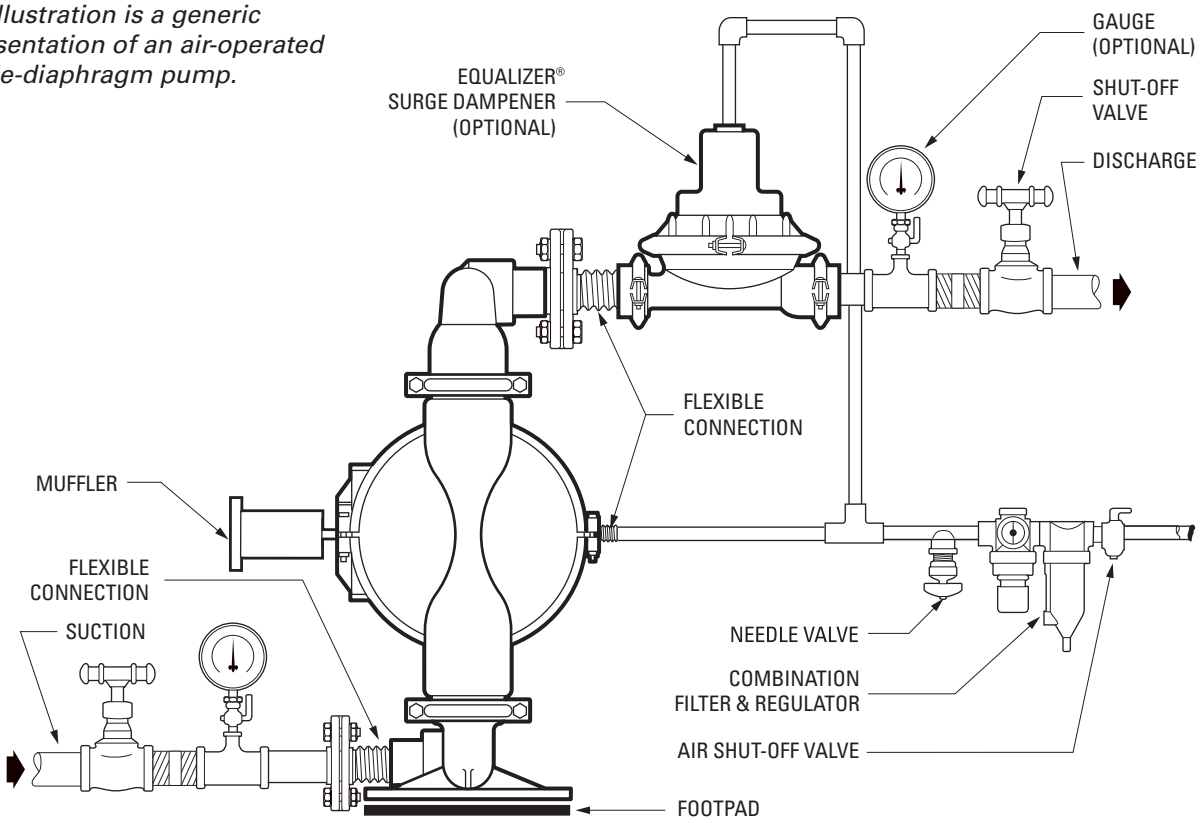

NOTE: In the event of a power failure, the shut-off valve should be closed, if the restarting of the pump is not desirable once power is regained.

AIR-OPERATED PUMPS: To stop the pump from operating in an emergency situation, simply close the shut-off valve (user-supplied) installed in the air supply line. A properly functioning valve will stop the air supply to the pump, therefore stopping output. This shut-off valve should be located far enough away from the pumping equipment such that it can be reached safely in an emergency situation.

SUGGESTED OPERATION & MAINTENANCE

OPERATION: The P4 and PX4 are pre-lubricated, and do not require in-line lubrication. Additional lubrication will not damage the pump, however if the pump is heavily lubricated by an external source, the pump's internal lubrication may be washed away. If the pump is then moved to a non-lubricated location, it may need to be disassembled and re-lubricated as described in the ASSEMBLY/DISASSEMBLY INSTRUCTIONS.

Pump discharge rate can be controlled by limiting the volume and/or pressure of the air supply to the pump. A regulator is used to control air pressure while a needle valve is used to control volume. Pump discharge rate can also be controlled by throttling the pump discharge by partially closing a valve in the discharge line of the pump. This action increases friction loss which reduces flow rate. (See Section 5.) This is useful when the need exists to control the pump from a remote location. When the pump discharge pressure equals or exceeds the air supply pressure, the pump will stop; no bypass or pressure relief valve is needed, and pump damage will not occur. The pump has reached a "deadhead" situation and can be restarted by reducing the fluid discharge pressure or increasing the air inlet pressure. The Wilden P4 and PX4 pump runs solely on compressed air and does not generate heat, therefore your process fluid temperature will not be affected.

MAINTENANCE AND INSPECTIONS: Since each application is unique, maintenance schedules may be different for every pump. Frequency of use, line pressure, viscosity and abrasiveness of process fluid all affect the parts life of a Wilden pump. Periodic inspections have been found to offer the best means for preventing unscheduled pump downtime. Personnel familiar with the pump's construction and service should be informed of any abnormalities that are detected during operation.

RECORDS: When service is required, a record should be made of all necessary repairs and replacements. Over a period of time, such records can become a valuable tool for predicting and preventing future maintenance problems and unscheduled downtime. In addition, accurate records make it possible to identify pumps that are poorly suited to their applications.

TROUBLESHOOTING

Pump will not run or runs slowly.

1. Ensure that the air inlet pressure is at least 0.3 bar (5 psig) above startup pressure and that the differential pressure (the difference between air inlet and liquid discharge pressures) is not less than 0.7 bar (10 psig).
2. Check air inlet filter for debris (see SUGGESTED INSTALLATION).
3. Check for extreme air leakage (blow by) which would indicate worn seals/bores in the air valve, pilot spool and main shaft.
4. Disassemble pump and check for obstructions in the air passageways or objects which would obstruct the movement of internal parts.
5. Check for sticking ball check valves. If material being pumped is not compatible with pump elastomers, swelling may occur. Replace ball check valves and seals with proper elastomers. Also, as the check valve balls wear out, they become smaller and can become stuck in the seats. In this case, replace balls and seats.
6. Check for broken inner piston which will cause the air valve spool to be unable to shift.
7. Remove plug from pilot spool exhaust.

Pump runs but little or no product flows.

1. Check for pump cavitation; slow pump speed down to allow thick material to flow into liquid chambers.
2. Verify that vacuum required to lift liquid is not greater than the vapor pressure of the material being pumped (cavitation).
3. Check for sticking ball check valves. If material being pumped is not compatible with pump elastomers, swelling may occur. Replace ball check valves and seats with proper elastomers. Also, as the check valve balls wear out, they become smaller and can become stuck in the seats. In this case, replace balls and seats.

Pump air valve freezes.

1. Check for excessive moisture in compressed air. Either install a dryer or hot air generator for compressed air. Alternatively, a coalescing filter may be used to remove the water from the compressed air in some applications.

Air bubbles in pump discharge.

1. Check for ruptured diaphragm.
2. Check tightness of outer pistons (refer to Section 7).
3. Check tightness of fasteners and integrity of O-rings and seals, especially at intake manifold.
4. Ensure pipe connections are airtight.

Product comes out air exhaust.

1. Check for diaphragm rupture.
2. Check tightness of outer pistons to shaft.

PUMP DISASSEMBLY

Tools Required:

- 7/16" Wrench
- 1/2" Wrench
- Adjustable Wrench
- Vise equipped w/soft jaws (such as plywood, plastic or other suitable material)

CAUTION: Before any maintenance or repair is attempted, the compressed air line to the pump should be disconnected and all air pressure allowed to bleed from the pump. Disconnect all intake, discharge and air lines. Drain the pump by turning it upside down and allowing any fluid to flow into a suitable container. Be aware of any hazardous effects of contact with your process fluid.

NOTE: The model photographed for these instructions incorporates rubber diaphragms, balls and seats.

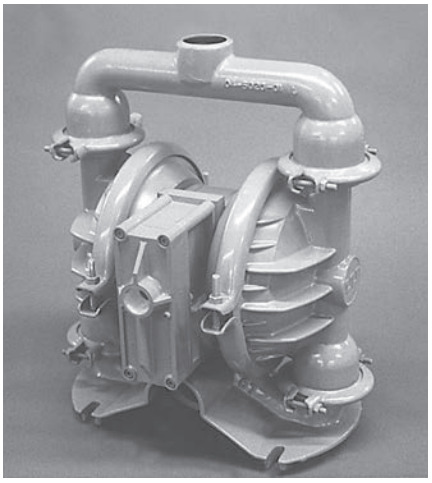

Step 1

Before starting disassembly, mark a line from each liquid chamber to its corresponding air chamber. This line will assist in proper alignment during reassembly.

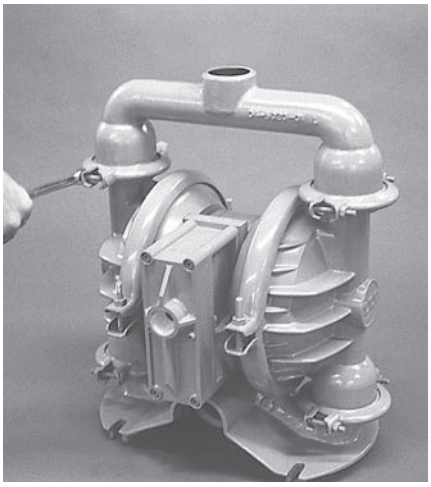

Step 2

Using a 7/16" wrench, remove the two (2) small clamp bands that fasten the discharge manifold to the liquid chambers.

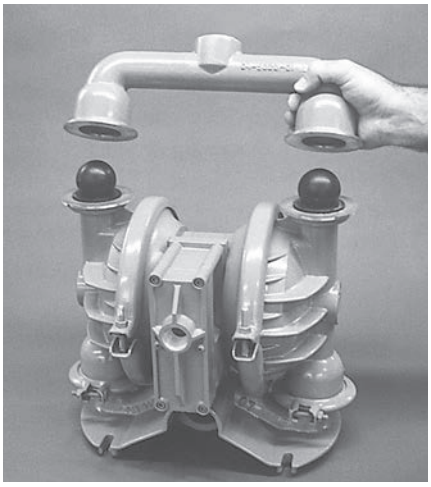

Step 3

Remove the discharge manifold to expose the valve balls and seats. Inspect ball cage area of manifold for excessive wear or damage.

PUMP DISASSEMBLY

Step 4

Remove the discharge valve balls and seats from the liquid chambers and inspect for nicks, chemical attack or abrasive wear. Replace worn parts with genuine Wilden parts for reliable performance.

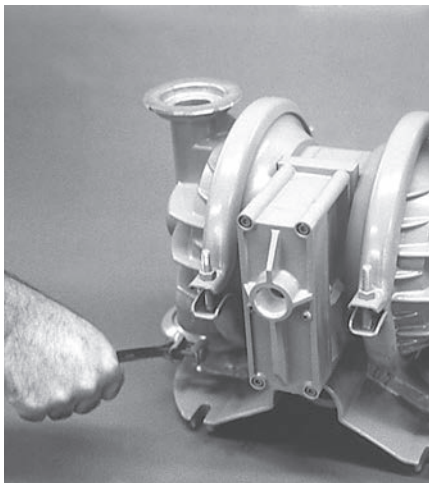

Step 5

Using a 1/2" wrench, remove the two (2) large clamp bands which fasten the intake manifold to the liquid chambers.

Step 6

Lift liquid chambers and center section from intake manifold to expose intake valve balls and seats. Inspect ball cage area of liquid chamber for excessive wear or damage.

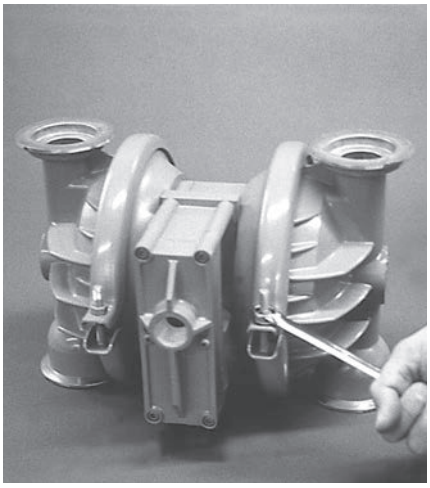

Step 7

Remove one (1) set of large clamp bands which secure one (1) liquid chamber to the center section.

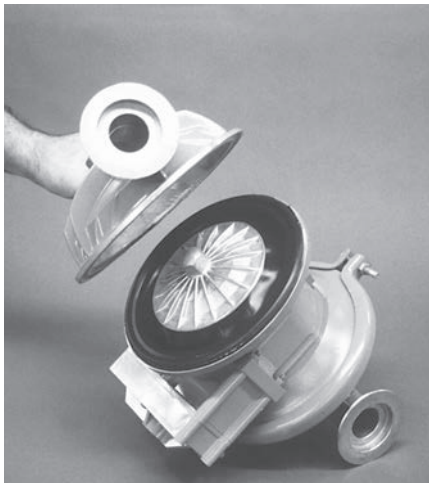

Step 8

Lift liquid chamber away from center section to expose diaphragm and outer piston.

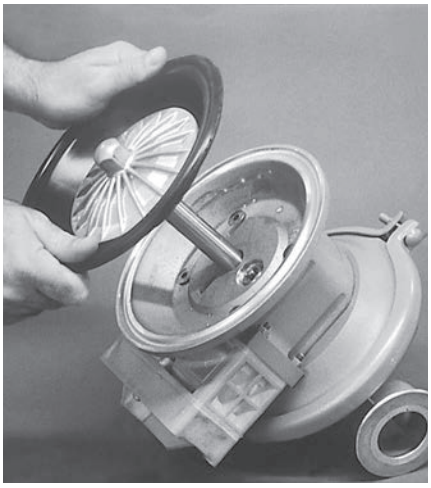

Step 9A

Using an adjustable wrench, or by rotating the diaphragm by hand, remove the diaphragm assembly.

NOTE: Due to varying torque values, one of the following two situations may occur: 1) The outer piston, diaphragm and inner piston remain attached to the shaft and the entire assembly can be removed from the center section.

PUMP DISASSEMBLY

Step 9B

2) The outer piston, diaphragm and inner piston separate from the shaft which remains connected to the opposite side diaphragm assembly. Repeat disassembly instructions for the opposite liquid chamber. Inspect diaphragm assembly and shaft for signs of wear or chemical attack. Replace all worn parts with genuine Wilden parts for reliable performance.

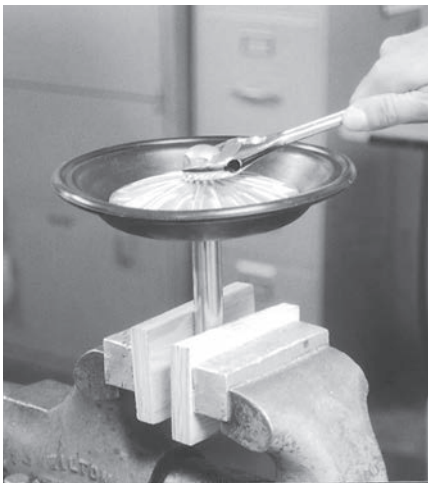

Step 10

To remove diaphragm assembly from shaft, secure shaft with soft jaws (a vise fitted with plywood, plastic or other suitable material) to ensure shaft is not nicked, scratched or gouged. Using an adjustable wrench, remove diaphragm assembly from shaft.

AIR VALVE/CENTER SECTION DISASSEMBLY

Tools Required:

- 3/16" Hex Head Wrench
- 1/4" Hex Head Wrench
- Snap-Ring Pliers
- O-Ring Pick

CAUTION: Before any maintenance or repair is attempted, the compressed air line to the pump should be disconnected and all air pressure allowed to bleed from the pump. Disconnect all intake, discharge and air lines. Drain the pump by turning it upside down and allowing any fluid to flow into a suitable container. Be aware of hazardous effects of contact with your process fluid.

The Wilden Metal P4 and PX4 utilizes a revolutionary Pro-Flo® air distribution system. Proprietary composite seals reduce the coefficient of friction and allow the P4 and PX4 to run lube-free. Constructed of acetal, polypropylene, or aluminum the Pro-Flo® air distribution system is designed to perform in on/off, non-freezing, non-stalling, tough duty applications.

Step 1

Loosen the air valve bolts utilizing a 3/16" hex head wrench and then remove muffler plate screws.

Step 2

Remove muffler plate and air valve bolts from air valve assembly exposing muffler gasket for inspection. Replace, if necessary.

Step 3

Lift away air valve assembly and remove air valve gasket for inspection. Replace, if necessary.

AIR VALVE/CENTER SECTION DISASSEMBLY

Step 4

Remove air valve end cap to expose air valve spool by simply lifting up on end cap once air valve bolts are removed.

Step 5

Remove air valve spool from air valve body by threading one air valve bolt into the end of the spool and gently sliding the spool out of the air valve body. Inspect seals for signs of wear and replace entire assembly if necessary. Use caution when handling air valve spool to prevent damaging seals.

NOTE: Seals should not be removed from assembly. Seals are not sold separately.

Step 6

Remove pilot spool retaining snap ring on both sides of center section with snap-ring pliers.

Step 7

Remove air chamber bolts with 1/4" hex head wrench.

Step 8

Remove pilot spool bushing from center block.

Step 9

With O-ring pick, gently remove the O-ring from the opposite side of the notched end of the spool. Gently remove the pilot spool from sleeve and inspect for nicks or gouges and other signs of wear. Replace pilot sleeve assembly or outer sleeve O-rings, if necessary. During re-assembly never insert the pilot spool into the sleeve with the “notched end” first, this end incorporates the urethane O-ring and will be damaged as it slides over the ports cut in the sleeve.

NOTE: Seals should not be removed from pilot spool. Seals are not sold separately.

AIR VALVE/CENTER SECTION DISASSEMBLY

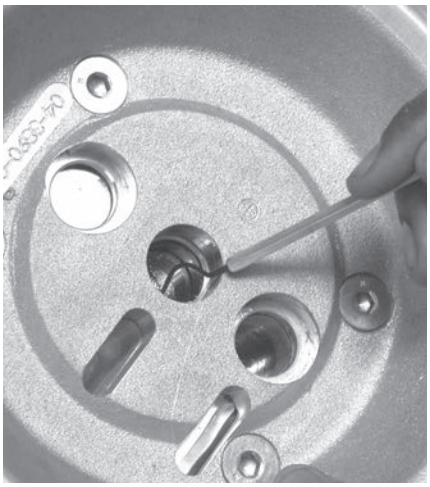

Step 10A

Check center block shaft seals for signs of wear. If necessary, remove shaft seals with O-ring pick and replace.

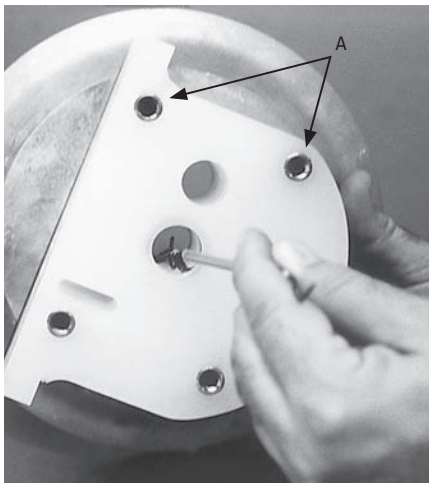

Step 10B

NOTE: Threaded sleeves (see A above) are removable and can be replaced if necessary. Sleeves can be press-fit by hand. This applies to Pro-Flo® pumps ONLY.

SUBMERSIBLE PRO-FLO X™

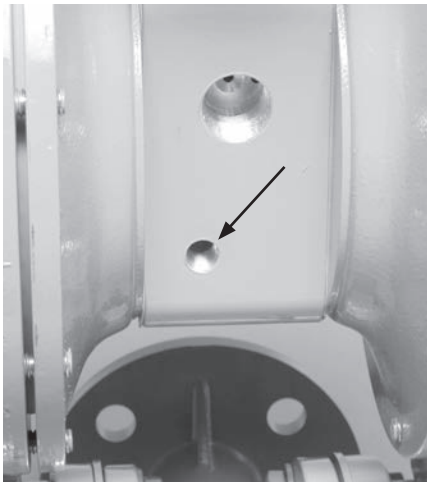

Step 1

Install a 1/4" NPT pipe plug (00-7010-08) into the pilot spool bleed port located at the front of the center block.

Non-Submersible

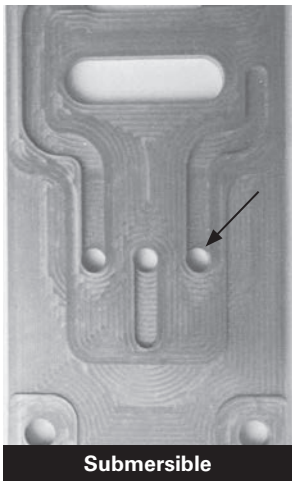

Submersible

Step 2

Next, install an optional submersible air valve gasket (04-2621-52). The submersible air valve gasket can be purchased as a spare part or included with the purchase of a new Pro-Flo X™ pump.

REASSEMBLY HINTS & TIPS

ASSEMBLY:

Upon performing applicable maintenance to the air distribution system, the pump can now be reassembled. Please refer to the disassembly instructions for photos and parts placement. To reassemble the pump, follow the disassembly instructions in reverse order. The air distribution system needs to be assembled first, then the diaphragms and finally the wetted path. Please find the applicable torque specifications on this page. The following tips will assist in the assembly process.

- Lubricate air valve bore, center section shaft and pilot spool bore with NLGI grade 2 white EP bearing grease or equivalent.
- Clean the inside of the center section shaft bore to ensure no damage is done to new shaft seals.
- A small amount of NLGI grade 2 white EP bearing grease can be applied to the muffler and air valve gaskets to locate gaskets during assembly.
- Make sure that the exhaust port on the muffler plate is centered between the two exhaust ports on the center section.
- Stainless bolts should be lubed to reduce the possibility of seizing during tightening.
- Use a mallet to tamp lightly on the large clamp bands to seat the diaphragm before tightening.

PROFLO® MAXIMUM TORQUE SPECIFICATIONS

Description of Part	Torque
Air Valve	5.1 N·m (45 in-lb)
Air Chamber/Center Block	27.1 N·m (20 ft-lb)
Outer Pistons, All	54.2 N·m (40 ft-lb)
Small Clamp Bands	3.4 N·m (30 in-lb)
Large Clamp Bands (Rubber-Fitted)	10.7 N·m (95 in-lb)
Large Clamp Bands (PTFE-Fitted)	13.6 N·m (120 in-lb)

PROFLO X™ MAXIMUM TORQUE SPECIFICATIONS

Description of Part	Torque
Air Valve	13.6 N·m (120 in-lb)
Air Chamber/Center Block	27.1 N·m (20 ft-lb)
Outer Pistons, All	54.2 N·m (40 ft-lb)
Small Clamp Bands	3.4 N·m (30 in-lb)
Large Clamp Bands (Rubber-Fitted)	10.7 N·m (95 in-lb)
Large Clamp Bands (PTFE-Fitted)	13.6 N·m (120 in-lb)

SHAFT SEAL INSTALLATION:

PRE-INSTALLATION

- Once all of the old seals have been removed, the inside of the bushing should be cleaned to ensure no debris is left that may cause premature damage to the new seals.

INSTALLATION

The following tools can be used to aid in the installation of the new seals:

Needle Nose Pliers
Phillips Screwdriver
Electrical Tape

- Wrap electrical tape around each leg of the needle nose pliers (heat shrink tubing may also be used). This is done to prevent damaging the inside surface of the new seal.
- With a new seal in hand, place the two legs of the needle nose pliers inside the seal ring. (See Figure A.)
- Open the pliers as wide as the seal diameter will allow, then with two fingers pull down on the top portion of the seal to form kidney bean shape. (See Figure B.)
- Lightly clamp the pliers together to hold the seal into the kidney shape. Be sure to pull the seal into as tight of a kidney shape as possible, this will allow the seal to travel down the bushing bore easier.
- With the seal clamped in the pliers, insert the seal into the bushing bore and position the bottom of the seal into the correct groove. Once the bottom of the seal is seated in the groove, release the clamp pressure on the pliers. This will allow the seal to partially snap back to its original shape.
- After the pliers are removed, you will notice a slight bump in the seal shape. Before the seal can be properly resized, the bump in the seal should be removed as much as possible. This can be done with either the Phillips screwdriver or your finger. With either the side of the screwdriver or your finger, apply light pressure to the peak of the bump. This pressure will cause the bump to be almost completely eliminated.
- Lubricate the edge of the shaft with NLGI grade 2 white EP bearing grease.
- Slowly insert the center shaft with a rotating motion. This will complete the resizing of the seal.
- Perform these steps for the remaining seals.

Figure A

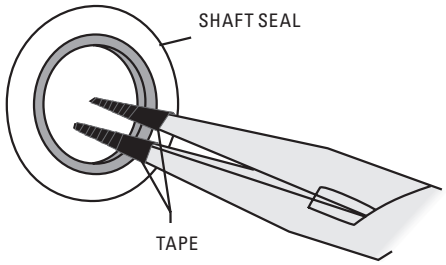

Figure B

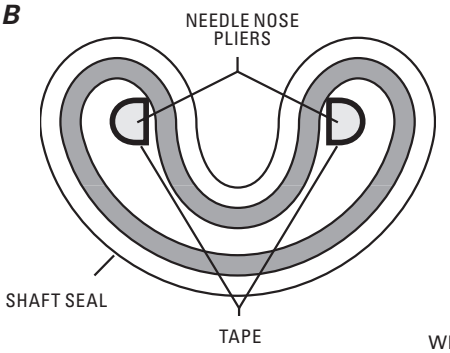

GASKET KIT INSTALLATION

Only P4 and PX4 Cast Iron pumps come standard with expanded PTFE Gasket Kits (P/N 04-9502-99). Carefully prepare sealing surfaces by removing all debris and foreign matter from diaphragm bead and all mating surfaces. If necessary, smooth or deburr all sealing surfaces. Mating surfaces must be properly aligned in order to ensure positive sealing characteristics.

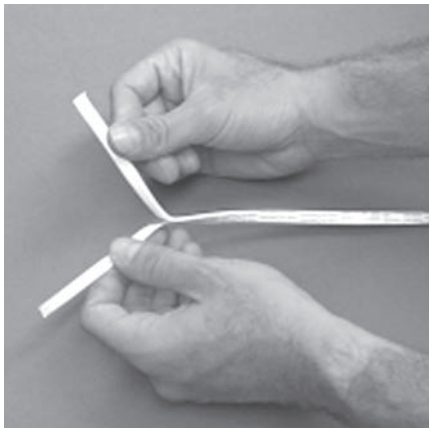

Step 1

Gently remove the adhesive covering from the back of the PTFE tape. Ensure that the adhesive strip remains attached to the PTFE tape.

Step 2

Starting at any point, place the PTFE tape in the center of the diaphragm bead groove on the liquid chamber and press lightly on the tape to ensure that the adhesive holds in place during assembly. Do not stretch the tape during placement in the center of diaphragm bead groove.

Step 3

The end of the tape should overlap approximately 13 mm (1/2"). Proceed to install the PTFE tape on the remaining diaphragm.

EXPLODED VIEW AND PARTS LISTING

P4 METAL | Full-Stroke Diaphragm-Fitted | EXPLODED VIEW

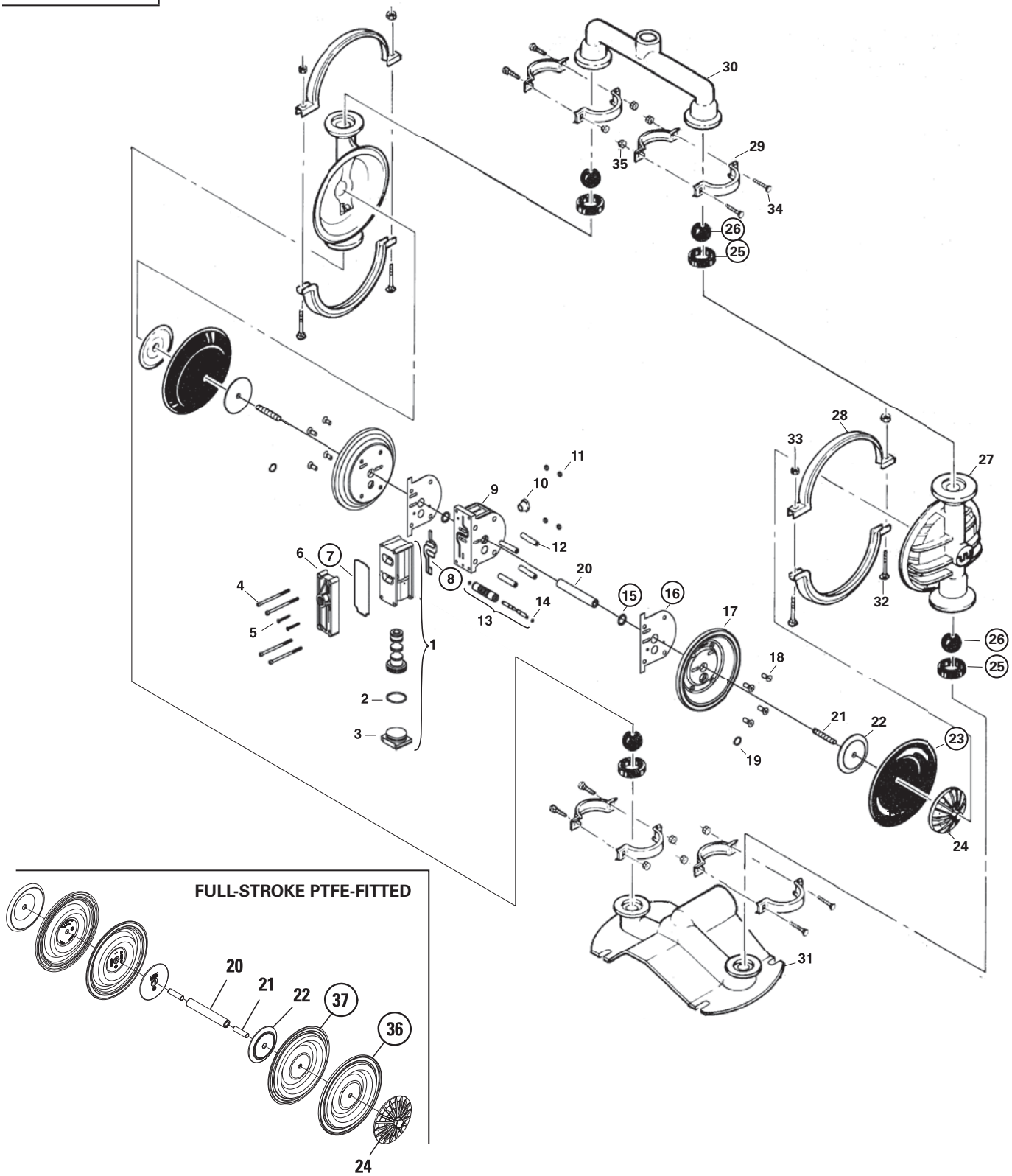

ALL CIRCLED PART IDENTIFIERS ARE INCLUDED IN REPAIR KITS (see Section 9).

P4 METAL Full-Stroke Diaphragm-Fitted PARTS LISTING

No.	Part Description	Qty.	P4/AAPP P/N	P4/WAPP P/N	P4/SAPP P/N	P4/SAPP/070 P/N
1	**Pro-Flo® Air Valve Assembly[1]**	**1**	**04-2000-20-700**	**04-2000-20-700**	**04-2000-20-700**	**04-2000-20-700**
2	O-Ring (-225), End Cap (1.859 x .139)	1	04-2390-52-700	04-2390-52-700	04-2390-52-700	04-2390-52-700
3	End Cap, Pro-Flo®	1	04-2330-20-700	04-2330-20-700	04-2330-20-700	04-2330-20-700
4	Screw, HHC, Air Valve (1/4" x 4.5")	4	01-6000-03	01-6000-03	01-6000-03	01-6000-03
5	Screw, SHCS, 10-16 x 1 3/4"	2	04-6351-03	04-6351-03	04-6351-03	04-6351-03
6	Muffler Plate, Pro-Flo®	1	04-3180-20-700	04-3180-20-700	04-3180-20-700	04-3180-20-700
7	**Gasket, Muffler Plate**	**1**	**04-3500-52-700**	**04-3500-52-700**	**04-3500-52-700**	**04-3500-52-700**
8	**Gasket, Air Valve**	**1**	**04-2600-52-700**	**04-2600-52-700**	**04-2600-52-700**	**04-2600-52-700**
9	Center Section Assembly	1	04-3110-20	04-3110-20	04-3110-20	04-3110-20
10	Bushing, Reducer, NPT/BSP Combo	1	04-6950-20-700	04-6950-20-700	04-6950-20-700	04-6950-20-700
11	Nut, Square, 1/4"-20	4	00-6505-03	00-6505-03	00-6505-03	00-6505-03
12	Sleeve, Threaded, Pro-Flo® Center Block	4	04-7710-08	04-7710-08	04-7710-08	04-7710-08
13	**Removable Pilot Sleeve Assembly**	**1**	**04-3880-99**	**04-3880-99**	**04-3880-99**	**04-3880-99**
14	Pilot Spool Retaining O-Ring	2	04-2650-49-700	04-2650-49-700	04-2650-49-700	04-2650-49-700
15	**Shaft Seal**	**2**	**08-3210-55-225**	**08-3210-55-225**	**08-3210-55-225**	**08-3210-55-225**
16	**Gasket, Center Block, Pro-Flo®**	**2**	**04-3526-52**	**04-3526-52**	**04-3526-52**	**04-3526-52**
17	Air Chamber, Pro-Flo®	2	04-3651-01	04-3651-01	04-3651-01	04-3651-01
18	Screw, HSFHS, 3/8"-16 x 1"	8	71-6250-08	71-6250-08	71-6250-08	71-6250-08
19	Retaining Ring	2	04-3890-03	04-3890-03	04-3890-03	04-3890-03
20	Shaft, Pro-Flo®	1	04-3800-03-700	04-3800-03-700	04-3800-03-700	04-3800-03-700
21	Shaft Stud (P4/WAPP: Bolt)[2]	2	08-6150-08	04-6091-08	08-6150-08	08-6150-08
22	Inner Piston	2	04-3700-01-700	04-3700-01-700	04-3700-01-700	04-3700-01-700
23	**Diaphragm**	**2**	*	*	*	**04-1010-56**
24	Outer Piston	2	04-4552-01	04-4550-08	04-4550-03	04-4550-03P
25	**Valve Seat**	**4**	*	*	*	**04-1120-56**
26	**Valve Ball**	**4**	*	*	*	**04-1080-56**
27	Liquid Chamber	2	04-5000-01	04-5000-02	04-5000-03	04-5000-03P
28	Large Clamp Band Assy.	2	04-7330-08	04-7330-08	04-7330-03	04-7330-03-70P
29	Small Clamp Band Assy.	4	04-7100-08	04-7100-08	04-7100-03	04-7100-03-70P
30	Manifold, Discharge	1	04-5020-01	04-5020-02	04-5020-03	04-5020-03-70
31	Manifold, Footed Inlet	1	04-5080-01	04-5080-02	04-5080-03	04-5080-03-70
32	Carriage Bolt, Large Clamp Band (5/16"-18 x 2-1/2")	4	04-6070-08	04-6070-08	04-6070-03	04-6070-03
33	Hex Nut, Large Clamp Band (5/16"-18)	4	04-6420-08	04-6420-08	08-6400-03	08-6661-10
34	Carriage Bolt, Small Clamp Band (1/4"-20 x 2")	8	04-6050-08	04-6050-08	01-6070-03	01-6070-03
35	Hex Nut, Small Clamp Band (1/4"-20)	8	04-6400-08	04-6400-08	04-6400-03	04-6651-10
	Muffler (Not Shown)	1	04-3510-99	04-3510-99	04-3510-99	04-3510-99
	Washer, Flat 1/4" (Not Shown)	8	N/A	N/A	N/A	04-6700-07-70
	Washer, Flat 5/16" (Not Shown)	4	N/A	N/A	N/A	08-6700-07-70
36	**Diaphragm, Primary Full Stroke PTFE**	**2**	*	*	*	*
37	**Diaphragm, Backup Full Stroke PTFE**	**2**	*	*	*	*

[1]Air Valve Assembly includes item numbers 2 and 3.
[2]NOTE: Rubber/TPE-fitted cast iron pumps use 1/2"-20 x 1-1/2" Hex Bolt (P/N 04-6091-08) with washer (P/N 04-6800-08).
BSP-fitted pumps are available. Contact your distributor for part numbers.
For optional P4 Metal Pump elastomers, see Section 9.
NOTE: Aluminum pumps are available with a screen base. Requires (1) 04-5620-01 (Screen), (4) 04-6140-08 (Bolt) and (4) 15-6720-08 (Washer).

-0070 Specialty Code = Saniflo[FDA]

*See Section 9 — Elastomer Chart

All boldface items are primary wear parts.

EXPLODED VIEW AND PARTS LISTING

P4 METAL | Reduced-Stroke Diaphragm-Fitted | EXPLODED VIEW

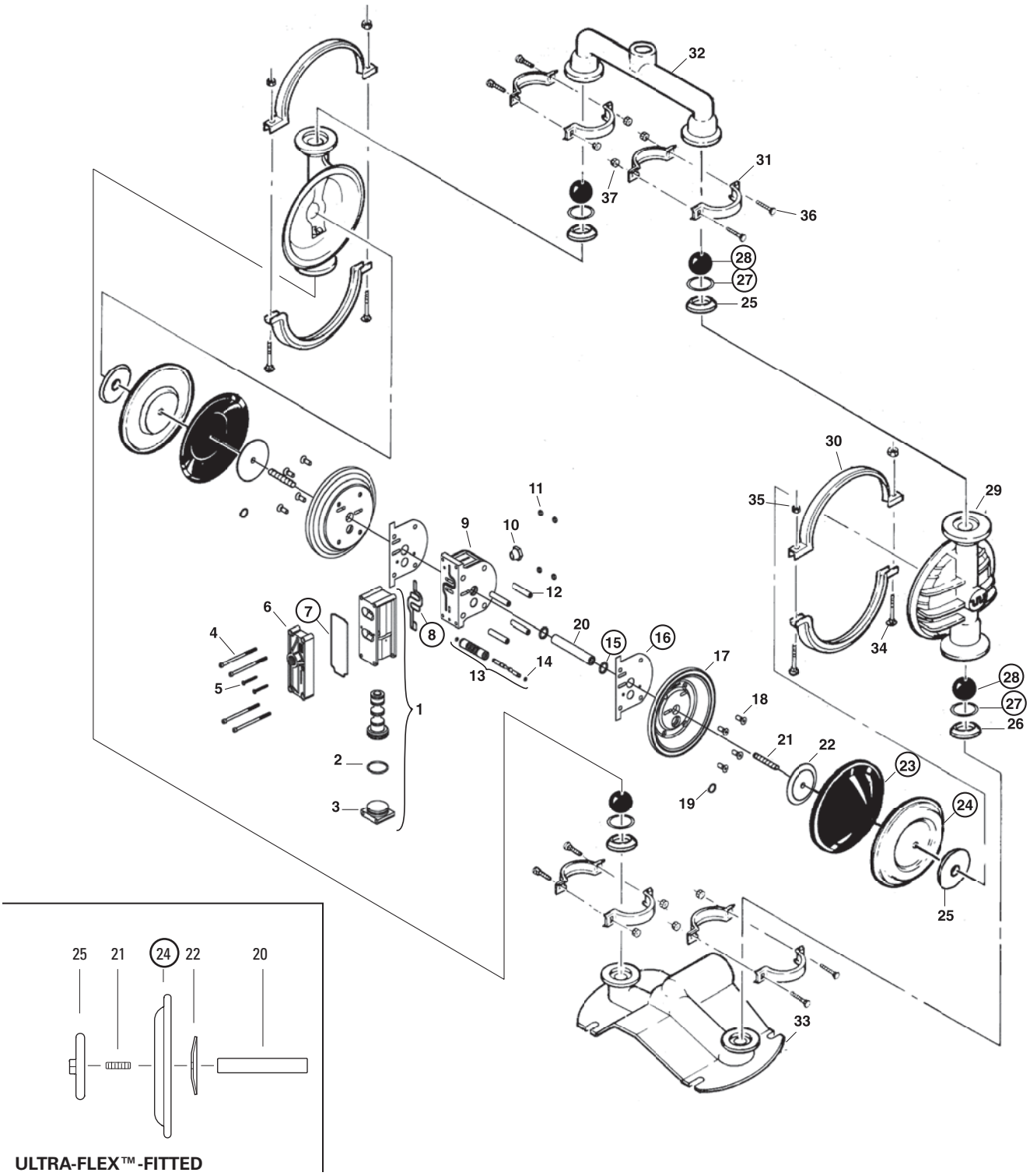

ALL CIRCLED PART IDENTIFIERS ARE INCLUDED IN REPAIR KITS (see Section 9).

P4 METAL Reduced-Stroke Diaphragm-Fitted PARTS LISTING

No.	Part Description	Qty.	P4/AAPP P/N	P4/WAPP P/N	P4/SAPP P/N	P4/SAPP/0070 P/N
1	**Pro-Flo® Air Valve Assembly[1]**	**1**	**04-2000-20-700**	**04-2000-20-700**	**04-2000-20-700**	**04-2000-20-700**
2	O-Ring (-225), End Cap (1.859 x .139)	1	04-2390-52-700	04-2390-52-700	04-2390-52-700	04-2390-52-700
3	End Cap, Pro-Flo®	1	04-2330-20-700	04-2330-20-700	04-2330-20-700	04-2330-20-700
4	Screw, HHC, Air Valve (1/4" x 4.5")	4	01-6000-03	01-6000-03	01-6000-03	01-6000-03
5	Screw, SHCS, 10-16 x 1 3/4"	2	04-6351-03	04-6351-03	04-6351-03	04-6351-03
6	Muffler Plate, Pro-Flo®	1	04-3180-20-700	04-3180-20-700	04-3180-20-700	04-3180-20-700
7	**Gasket, Muffler Plate**	**1**	**04-3500-52-700**	**04-3500-52-700**	**04-3500-52-700**	**04-3500-52-700**
8	**Gasket, Air Valve**	**1**	**04-2600-52-700**	**04-2600-52-700**	**04-2600-52-700**	**04-2600-52-700**
9	Center Section Assembly	1	04-3110-20	04-3110-20	04-3110-20	04-3110-20
10	Bushing, Reducer, NPT/BSP Combo	1	04-6950-23-700	04-6950-23-700	04-6950-23-700	04-6950-23-700
11	Nut, Square, 1/4"-20	4	00-6505-07	00-6505-07	00-6505-07	00-6505-07
12	Sleeve, Threaded, Pro-Flo® Center Block	4	04-7710-08	04-7710-08	04-7710-08	04-7710-08
13	**Removable Pilot Sleeve Assembly**	**1**	**04-3880-99**	**04-3880-99**	**04-3880-99**	**04-3880-99**
14	Pilot Spool Retaining O-Ring	2	04-2650-49-700	04-2650-49-700	04-2650-49-700	04-2650-49-700
15	**Shaft Seal**	**2**	**08-3210-55-225**	**08-3210-55-225**	**08-3210-55-225**	**08-3210-55-225**
16	**Gasket, Center Block, Pro-Flo®**	**2**	**04-3526-52**	**04-3526-52**	**04-3526-52**	**04-3526-52**
17	Air Chamber, Pro-Flo®	2	04-3651-01	04-3651-01	04-3651-01	04-3651-01
18	Screw, HSFHS, 3/8"-16 x 1"	8	71-6250-08	71-6250-08	71-6250-08	71-6250-08
19	Retaining Ring	2	04-3890-03	04-3890-03	04-3890-03	04-3890-03
20	Shaft, Pro-Flo®	1	04-3820-03-700	04-3820-03-700	04-3820-03-700	04-3820-03-700
	Shaft, Pro-Flo®, Ultra-Flex™	1	04-3830-03-700	04-3830-03-700	04-3830-03-700	N/A
21	Stud, Shaft	2	04-6150-08	04-6150-08	04-6150-08	04-6150-08
	Shaft Stud, Ultra-Flex™	2	N/R	04-6152-08	04-6152-08	N/A
22	Inner Piston	2	04-3715-01	04-3715-01	04-3715-01	04-3715-01
	Inner Piston, Ultra-Flex™	2	04-3760-01-700	04-3760-01-700	04-3760-01-700	N/A
23	**Back-up Diaphragm**	**2**	*	*	*	*
24	**Diaphragm**	**2**	*	*	*	*
25	Outer Piston	2	04-4600-01	04-4600-03	04-4600-03	04-4600-03P
	Outer Piston, Ultra-Flex™	2	04-4560-01	04-4560-02	02-4550-03	N/A
26	**Valve Seat**	**4**	**04-1121-01**	**04-1121-08**	**04-1121-03**	**04-1121-03P**
27	**Valve Seat, O-Ring (2.609" x .139")**	**4**	**04-1200-55**	**04-1200-55**	**04-1200-55**	**04-1200-55**
28	**Valve Ball**	**4**	**04-1080-55**	**04-1080-55**	**04-1080-55**	**04-1080-55**
29	Liquid Chamber	2	04-5000-01	04-5000-02	04-5000-03	04-5000-03P
30	Large Clamp Band Assy.	2	04-7330-03	04-7330-03	04-7330-03	04-7330-03-70
31	Small Clamp Band Assy.	4	04-7100-03	04-7100-03	04-7100-03	04-7100-03-70
32	Manifold, Discharge	1	04-5020-01	04-5020-02	04-5020-03	04-5020-03-70P
33	Manifold, Footed Inlet	1	04-5080-01	04-5080-02	04-5080-03	04-5080-03-70P
34	Carriage Bolt, Large Clamp Band (5/16"-18 x 2-1/2")	4	04-6070-03	04-6070-03	04-6070-03	04-6070-03
35	Hex Nut, Large Clamp Band (5/16"-18)	4	08-6400-03	08-6400-03	08-6400-03	08-6661-10
36	Carriage Bolt, Small Clamp Band (1/4"-20 x 2")	8	01-6070-03	01-6070-03	01-6070-03	01-6070-03
37	Hex Nut, Small Clamp Band (1/4"-20)	8	04-6400-03	04-6400-03	04-6400-03	04-6651-10
	Muffler (Not Shown)	1	04-3510-99	04-3510-99	04-3510-99	04-3510-99
	Washer, Flat 1/4" (Not Shown)	8	N/A	N/A	N/A	04-6700-07-70
	Washer, Flat 5/16" (Not Shown)	4	N/A	N/A	N/A	08-6700-07-70

[1]Air Valve Assembly includes item numbers 2 and 3.
BSP-fitted pumps are available. Contact your distributor for part numbers.
Fluoro-Seal™ O-rings available upon request.
Back-up Diaphragm for PTFE-fitted pump: P/N 04-1060-51. Saniflex™ Back-up Diaphragm, P/N 04-1060-56, is available upon request for PTFE-fitted pumps. Please consult your local distributor.

0070 Specialty Code = Saniflo[FDA]

All boldface items are primary wear parts.

P4 METAL SANIFLO™ | 1935/2004/EC | EXPLODED VIEW

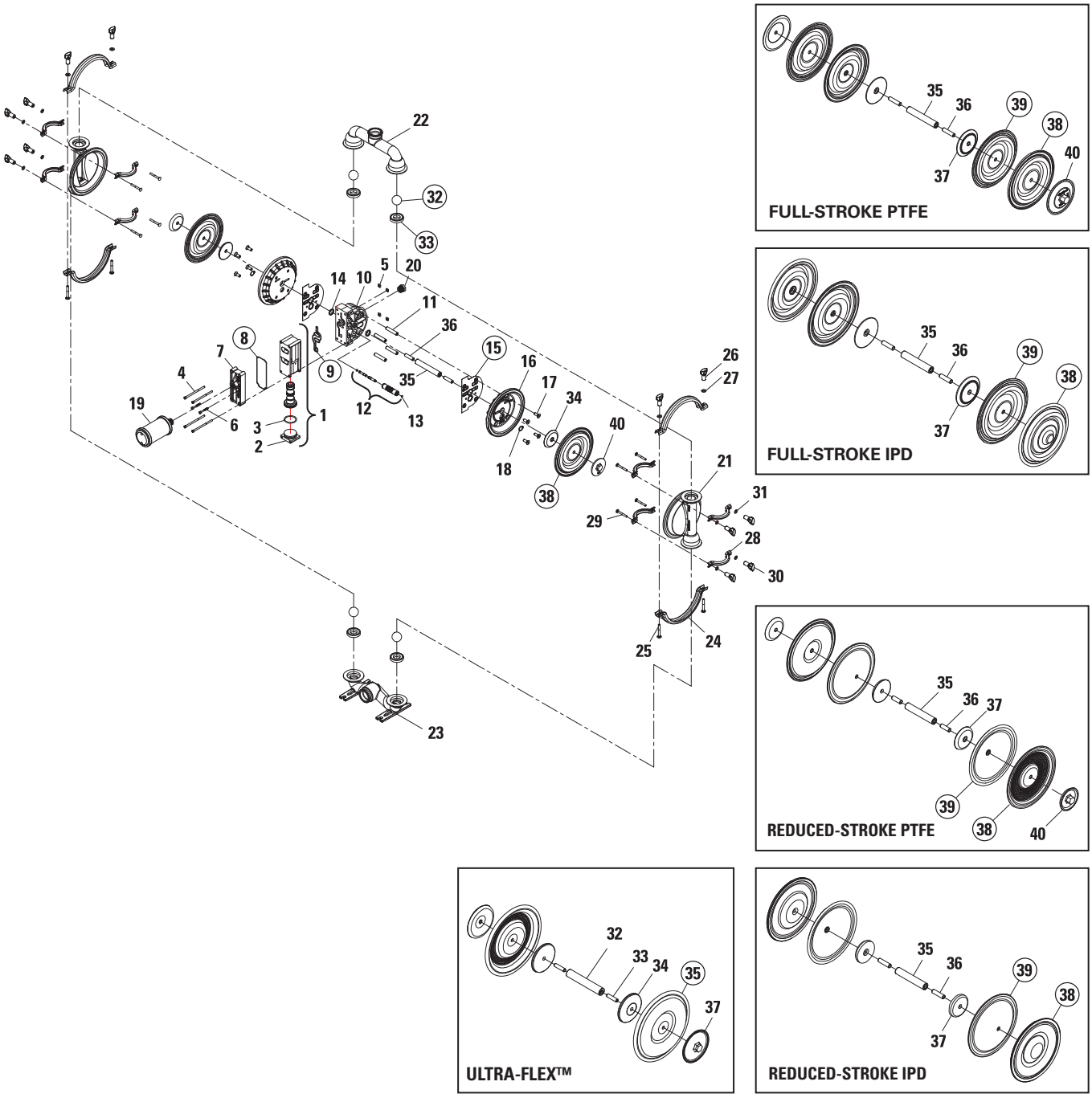

LW0096, Rev. A

ALL CIRCLED PART IDENTIFIERS ARE INCLUDED IN REPAIR KITS (see Section 9).

P4 METAL SANIFLO™ 1935/2004/EC PARTS LISTING

Item	Description	Qty.	P4/SSPPP/ 1935/2004/EC P/N
	AIR DISTRIBUTION COMPONENTS		
1	**Air Valve Assembly, Pro-Flo [1]**	**1**	**04-2000-20-700**
2	End Cap	1	04-2330-20-700
3	**O-Ring (-225), End Cap (Ø1.859" x Ø.139")**	**1**	**04-2390-52-700**
4	Screw, SHC, Air Valve (1/4"-20 x 4 1/2")	4	01-6000-03
5	Nut, Square (1/4"-20)	4	00-6505-03
6	Self Tapping Screw, SHC, Air Valve (#10-16 x 1-3/4")	2	04-6351-03
7	Muffler Plate, Pro-Flo	1	04-3180-20-700
8	**Gasket, Muffler Plate, Pro-Flo**	**1**	**04-3500-52-700**
9	**Gasket, Air Valve, Pro-Flo**	**1**	**04-2600-52-700**
10	Center Block Assembly, Pro-Flo [2]	1	04-3110-20
11	Sleeve, Theraded, Pro-Flo Center Block	4	04-7710-08
12	**Pilot Sleeve Assembly**	**1**	**04-3880-99**
13	**O-Ring (-009), Pilot Spool Retaining (Ø.208" x Ø.070")**	**2**	**04-2650-49-700**
14	**Seal, Shaft**	**2**	**08-3210-55-225**
15	**Gasket, Center Block Pro-Flo**	**2**	**04-3526-52**
16	Air Chamber, Pro-Flo	2	04-3651-01
17	Screw, SFCHC (3/8"-16 x 1")	8	71-6250-08
18	Retaining Ring	2	04-3890-03
19	Muffler 3/4" MNPT	1	04-3510-99R
20	Bushing, Reducer, 3/4" MNPT to 1/2" MNPT	1	04-6950-20-700
	WETTED PATH COMPONENTS		
21	Liquid Chamber	2	04-5000-03P
22	Manifold, Discharge Tri-Clamp	1	04-5020-03-70P
23	Manifold, Footed Inlet Tri-Clamp	1	04-5080-03-70P
24	Large Clamp Band Assembly	2	04-7330-03-70
25	RHSN Bolt, Large Clamp Band (5/16"-18 x 2-1/2")	4	04-6070-03
26	Wing Nut, Large Clamp Band (5/16"-18)	4	08-6661-10
27	Washer, Brass Flat (Ø.340" x Ø.750" x .063")	4	08-6700-07-70
28	Small Clamp Band Assembly	8	04-7100-03-70
29	RHSN Bolt, Small Clamp Band (1/4"-20 x 2-1/4")	8	01-6070-03
30	Wing Nut, Small Clamp Band (1/4"-20)	8	04-6651-10
31	Washer, Brass Flat (Ø.251" x Ø.620" x .063")	8	04-6700-07-70
	VALVE BALLS/VALVE SEATS/VALVE O-RINGS		
32	**Ball, Valve, Pkg 4**	**1**	*
33	**Seat, Valve, Pkg 4**	**1**	*
	Seat, Valve, Stainless Steel	**4**	**04-1121-03E**
34	**O-Ring (-226), Valve Seat (Ø.1.984" x Ø.139"), (Not Shown), Pkg 4**	**1**	**04-1200-55E**
	FULL-STROKE RUBBER/TPE/PTFE COMPONENTS		
35	Shaft	1	04-3800-03-700
36	Stud, Shaft (1/2"-20 x 1-7/8")	2	08-6150-08
36	Piston, Inner	2	04-3700-01-700
38	**Diaphragm, Primary, Pkg 2**	**1**	*
39	**Diaphragm, Back-Up, Pkg 2**	**1**	*
40	Piston, Outer	2	04-4550-03P

Item	Description	Qty.	P4/SSPPP/ 1935/2004/EC P/N
	ULTRA-FLEX COMPONENTS		
35	Shaft	1	04-3830-03-700
36	Stud, Shaft (3/8-16 x 1-1/2")	2	04-6152-08
37	Piston, Inner	2	04-3760-01-700
38	**Diaphragm Primary, Pkg 2**	**1**	*
39	Piston, Outer	2	02-4550-03P
	REDUCED STROKE PTFE COMPONENTS		
35	Shaft	1	04-3820-03-700
36	Stud, Shaft (1/2-20 x 1-1/2")	2	04-6150-08
37	Piston, Inner	2	04-3752-01
38	**Diaphragm Primary, Pkg 2**	**1**	*
39	**Diaphragm, Back-Up, Pkg 2**	**1**	*
40	Piston, Outer	2	04-4600-03P
	REDUCED STROKE IPD COMPONENTS		
35	Shaft	1	04-3820-03-700
36	Stud, Shaft (1/2-20 x 1-1/2")	2	04-6150-08
37	Piston, Inner	2	04-3755-01
38	**Diaphragm Primary, Pkg 2**	**1**	*
39	**Diaphragm, Back-Up, Pkg 2**	**1**	*
40	Piston, Outer	2	N/A
	FULL-STROKE IPD COMPONENTS		
35	Shaft	1	04-3800-03-700
36	Stud, Shaft (1/2-20 x 1-7/8")	2	08-6150-08
37	Piston, Inner	2	04-3700-01-700
38	**Diaphragm Primary, Pkg 2**	**1**	*
39	**Diaphragm, Back-Up, Pkg 2**	**1**	*
40	Piston, Outer	2	N/A

LW0084, Rev. B

[1] Air Valve Assembly includes items 2 and 3.
[2] Plastic Center Block Assembly includes items 14 and 20.
All boldface items are primary wear parts.

EXPLODED VIEW AND PARTS LISTING

P4 METAL | 1-Piece Center Section Full-Stroke Diaphragm-Fitted | EXPLODED VIEW

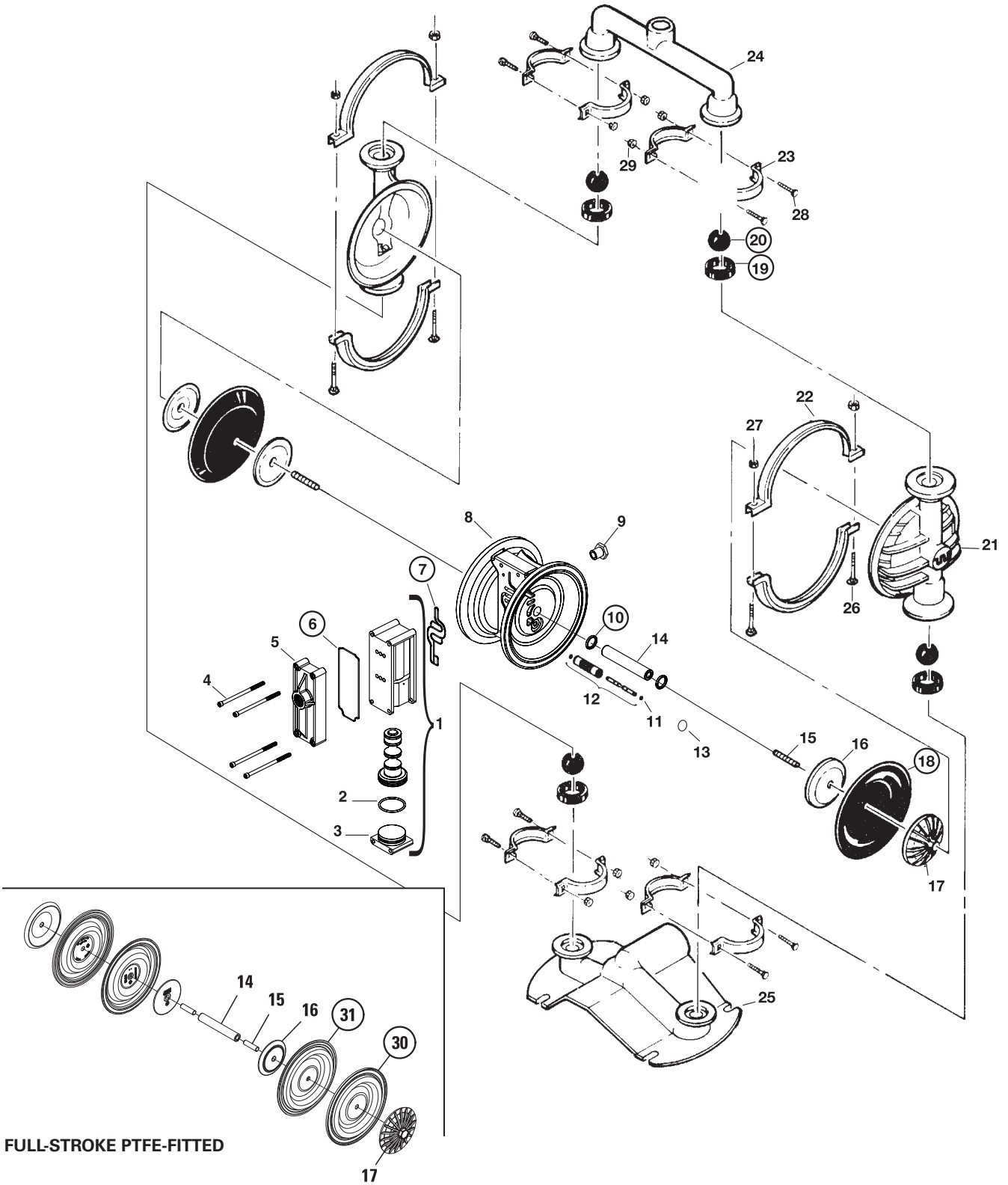

ALL CIRCLED PART IDENTIFIERS ARE INCLUDED IN REPAIR KITS (see Section 9).

P4 METAL 1-Piece Center Section Full-Stroke Diaphragm-Fitted PARTS LISTING

No.	Part Description	Qty	P4/ALLL P/N	P4/WLLL P/N	P4/SLLL P/N	P4/SLLL/0070 P/N
1	**Air Valve Assembly[1], Pro-Flo®**	**1**	**04-2000-13-700**	**04-2000-13-700**	**04-2000-13-700**	**04-2000-13-700**
2	O-Ring (-225), End Cap (1.859 x .139)	1	04-2390-52-700	04-2390-52-700	04-2390-52-700	04-2390-52-700
3	End Cap, Pro-Flo®	1	04-2330-13-700	04-2330-13-700	04-2330-13-700	04-2330-13-700
4	Screw, HHC, Air Valve (1/4"-20 x 4.5")	4	01-6000-03	01-6000-03	01-6000-03	01-6000-03
5	Muffler Plate, Pro-Flo®	1	04-3180-13-700	04-3180-13-700	04-3180-13-700	04-3180-13-700
6	**Gasket, Muffler Plate, Pro-Flo®**	**1**	**04-3500-52-700**	**04-3500-52-700**	**04-3500-52-700**	**04-3500-52-700**
7	**Gasket, Air Valve, Pro-Flo®**	**1**	**04-2600-52-700**	**04-2600-52-700**	**04-2600-52-700**	**04-2600-52-700**
8	Center Section Assembly, Pro-Flo®	1	04-3150-13-700	04-3150-13-700	04-3150-13-700	04-3150-13-700
9	Bushing Reducer, NPT/BSP Combo	1	04-6950-13-700	04-6950-13-700	04-6950-13-700	04-6950-13-700
10	**Shaft Seal**	**2**	**08-3510-55-225**	**08-3510-55-225**	**08-3510-55-225**	**08-3510-55-225**
11	Pilot Spool Retaining O-Ring	2	04-2650-49-700	04-2650-49-700	04-2650-49-700	04-2650-49-700
12	Removable Pilot Spool Assy.	1	04-3880-99	04-3880-99	04-3880-99	04-3880-99
13	Retaining Ring	2	04-3890-03	04-3890-03	04-3890-03	04-3890-03
14	Shaft	1	04-3800-03-700	04-3800-03-700	04-3800-03-700	04-3800-03-700
15	Shaft Stud[2]	2	08-6150-08	04-6091-08	08-6150-08	08-6150-08
16	Inner Piston	2	04-3700-01-700	04-3700-01-700	04-3700-01-700	04-3700-01-700
17	Outer Piston	2	04-4552-01	04-4550-08	04-4550-03	04-4550-03P
18	**Diaphragm**	**2**	*	*	*	**04-1010-56**
19	**Seat, Valve**	**4**	*	*	*	**04-1120-56**
20	**Ball, Valve**	**4**	*	*	*	**04-1080-56**
21	Liquid Chamber	2	04-5000-01	04-5000-02	04-5000-03	04-5000-03P
22	Large Clamp Band Assy.	2	04-7330-08	04-7330-08	04-7330-03	04-7330-03-70
23	Small Clamp Band Assy.	4	04-7100-08	04-7100-08	04-7100-03	04-7100-03-70
24	Discharge Manifold	1	04-5020-01	04-5020-02	04-5020-03	04-5020-03-70P
25	Inlet Manifold	1	04-5080-01	04-5080-02	04-5080-03	04-5080-03-70P
26	Carriage Bolt, Large Clamp Band (5/16"-18 x 2-1/2")	4	04-6070-08	04-6070-08	04-6070-03	04-6070-03
27	Hex Nut, Large Clamp Band (5/16"-18)	4	04-6420-08	04-6420-08	08-6400-03	08-6661-10
28	Carriage Bolt, Small Clamp Band (1/4"-20 x 2")	8	04-6050-08	04-6050-08	01-6070-03	01-6070-03
29	Hex Nut, Small Clamp Band (1/4"-20)	8	04-6400-08	04-6400-08	04-6400-03	04-6651-10
	Muffler (Not Shown)	1	04-3510-99	04-3510-99	04-3510-99	04-3510-99
	Washer, Flat, 1/4" (not shown)	8	N/A	N/A	N/A	04-6700-07-70
	Washer, Flat, 5/16" (not shown)	4	N/A	N/A	N/A	08-6700-07-70
30	**Diaphragm, Primary Full Stroke PTFE**	**2**	*	*	*	*
31	**Diaphragm, Backup Full Stroke PTFE**	**2**	*	*	*	*

[1]Air Valve Assembly includes item numbers 2 and 3.
[2]NOTE: Rubber/TPE-fitted cast iron pumps use 1/2"-20 x 1-1/2" Hex Bolt (P/N 04-6091-08) with washer (P/N 04-6800-08).

BSP-fitted pumps are available. Contact your distributor for part numbers.
For optional P4 Metal Pump elastomers, see Section 9.
NOTE: Aluminum pumps are available with a screen base. Requires (1) 04-5620-01 (Screen), (4) 04-6140-08 (Bolt) and (4) 15-6720-08 (Washer).

0070 Specialty Code = Saniflo[FDA]

*See Section 9 — Elastomer Chart

All boldface items are primary wear parts.

P4 METAL | 1-Piece Center Section Reduced-Stroke Diaphragm-Fitted | EXPLODED VIEW

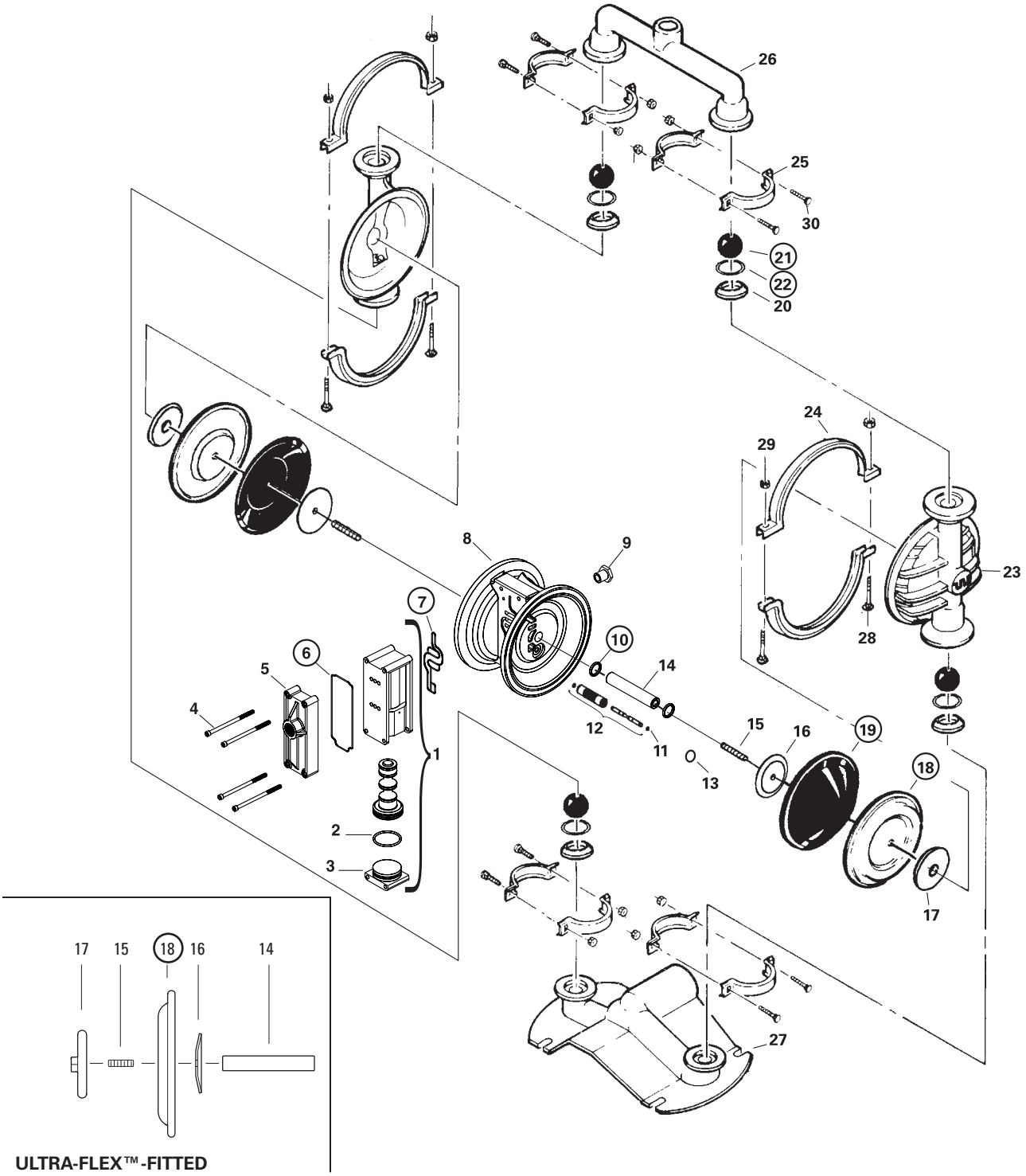

ALL CIRCLED PART IDENTIFIERS ARE INCLUDED IN REPAIR KITS (see Section 9).

P4 METAL 1-Piece Center Section Reduced-Stroke Diaphragm-Fitted PARTS LISTING

No.	Part Description	Qty.	P4/ALLL P/N	P4/WLLL P/N	P4/SLLL P/N	P4/SLLL/0070 P/N
1	**Air Valve Assembly[1], Pro-Flo®**	**1**	**04-2000-13-700**	**04-2000-13-700**	**04-2000-13-700**	**04-2000-13-700**
2	O-Ring (-225), End Cap (1.859 x .139)	1	04-2390-52-700	04-2390-52-700	04-2390-52-700	04-2390-52-700
3	End Cap, Pro-Flo®	1	04-2330-13-700	04-2330-13-700	04-2330-13-700	04-2330-13-700
4	Screw, HHC, Air Valve (1/4"-20 x 4.5")	4	01-6000-03	01-6000-03	01-6000-03	01-6000-03
5	Muffler Plate, Pro-Flo®	1	04-3180-13-700	04-3180-13-700	04-3180-13-700	04-3180-13-700
6	**Gasket, Muffler Plate, Pro-Flo®**	**1**	**04-3500-52-700**	**04-3500-52-700**	**04-3500-52-700**	**04-3500-52-700**
7	**Gasket, Air Valve, Pro-Flo®**	**1**	**04-2600-52-700**	**04-2600-52-700**	**04-2600-52-700**	**04-2600-52-700**
8	Center Section Assembly, Pro-Flo®	1	04-3150-13-700	04-3150-13-700	04-3150-13-700	04-3150-13-700
9	Bushing Reducer, NPT/BSP Combo	1	04-6950-13-700	04-6950-13-700	04-6950-13-700	04-6950-13-700
10	**Shaft Seal**	**2**	**08-3510-55-225**	**08-3510-55-225**	**08-3510-55-225**	**08-3510-55-225**
11	Pilot Spool Retaining O-Ring	2	04-2650-49-700	04-2650-49-700	04-2650-49-700	04-2650-49-700
12	Removable Pilot Spool Assy.	1	04-3880-99	04-3880-99	04-3880-99	04-3880-99
13	Retaining Ring	2	04-3890-03	04-3890-03	04-3890-03	04-3890-03
14	Shaft	1	04-3800-03-700	04-3800-03-700	04-3800-03-700	04-3800-03-700
	Shaft, Ultra-Flex	1	04-3830-03-700	04-3830-03-700	04-3830-03-700	04-3830-03-700
15	Shaft Stud	2	04-6150-08	04-6150-08	04-6150-08	04-6150-08
	Shaft Stud, Ultra-Flex	2	04-6152-08	04-6152-08	04-6152-08	04-6152-08
16	Inner Piston	2	04-3715-01	04-3715-01	04-3715-01	04-3715-01
	Inner Piston, Ultra-Flex	2	04-3710-01-700	04-3710-01-700	04-3710-01-700	04-3710-01-700
17	Outer Piston	2	04-4600-01	04-4600-01	04-4600-03	04-4600-03P
	Outer Piston, Ultra-Flex	2	04-4560-01	04-4560-02	04-4560-03	N/A
18	**Diaphragm**	**2**	*	*	*	*
19	**Back-up Diaphragm**	**2**	*	*	*	*
20	**Seat, Valve**	**4**	**04-1121-01**	**04-1121-08**	**04-1121-03**	**04-1121-03P**
21	**Valve Ball**	**4**	**04-1080-55**	**04-1080-55**	**04-1080-55**	**04-1080-55**
22	**Valve Seat O-ring**	**4**	**04-1200-55**	**04-1200-55**	**04-1200-55**	**04-1200-55**
23	Liquid Chamber	2	04-5000-01	04-5000-02	04-5000-03	04-5000-03P
24	Large Clamp Band Assy.	2	04-7330-08	04-7330-08	04-7330-03	04-7330-03-70
25	Small Clamp Band Assy.	4	04-7100-08	04-7100-08	04-7100-03	04-7100-03-70
26	Discharge Manifold	1	04-5020-01	04-5020-02	04-5020-03	04-5020-03-70P
27	Inlet Manifold	1	04-5080-01	04-5080-02	04-5080-03	04-5080-03-70P
28	Carriage Bolt, Large Clamp Band (5/16"-18 x 2-1/2")	4	04-6070-08	04-6070-08	04-6070-03	04-6070-03
29	Hex Nut, Large Clamp Band (5/16"-18)	4	04-6420-08	04-6420-08	08-6400-03	08-6661-10
30	Carriage Bolt, Small Clamp Band (1/4"-20 x 2")	8	04-6050-08	04-6050-08	01-6070-03	01-6070-03
31	Hex Nut, Small Clamp Band (1/4"-20)	8	04-6400-08	04-6400-08	04-6400-03	04-6651-10
	Muffler (Not Shown)	1	04-3510-99	04-3510-99	04-3510-99	04-3510-99
	Washer, Flat, 1/4" (not shown)	8	N/A	N/A	N/A	04-6700-07-70
	Washer, Flat, 5/16" (not shown)	4	N/A	N/A	N/A	08-6700-07-70

[1]Air Valve Assembly includes item numbers 2 and 3.

BSP-fitted pumps are available. Contact your distributor for part numbers.
For optional P4 Metal Pump elastomers, see Section 9.

0070 Specialty Code = Saniflo™ FDA

*See Section 9 — Elastomer Chart

All boldface items are primary wear parts.

EXPLODED VIEW AND PARTS LISTING

P4 METAL SANIFLO™ | 1935/2004/EC (1-Piece Center) | EXPLODED VIEW

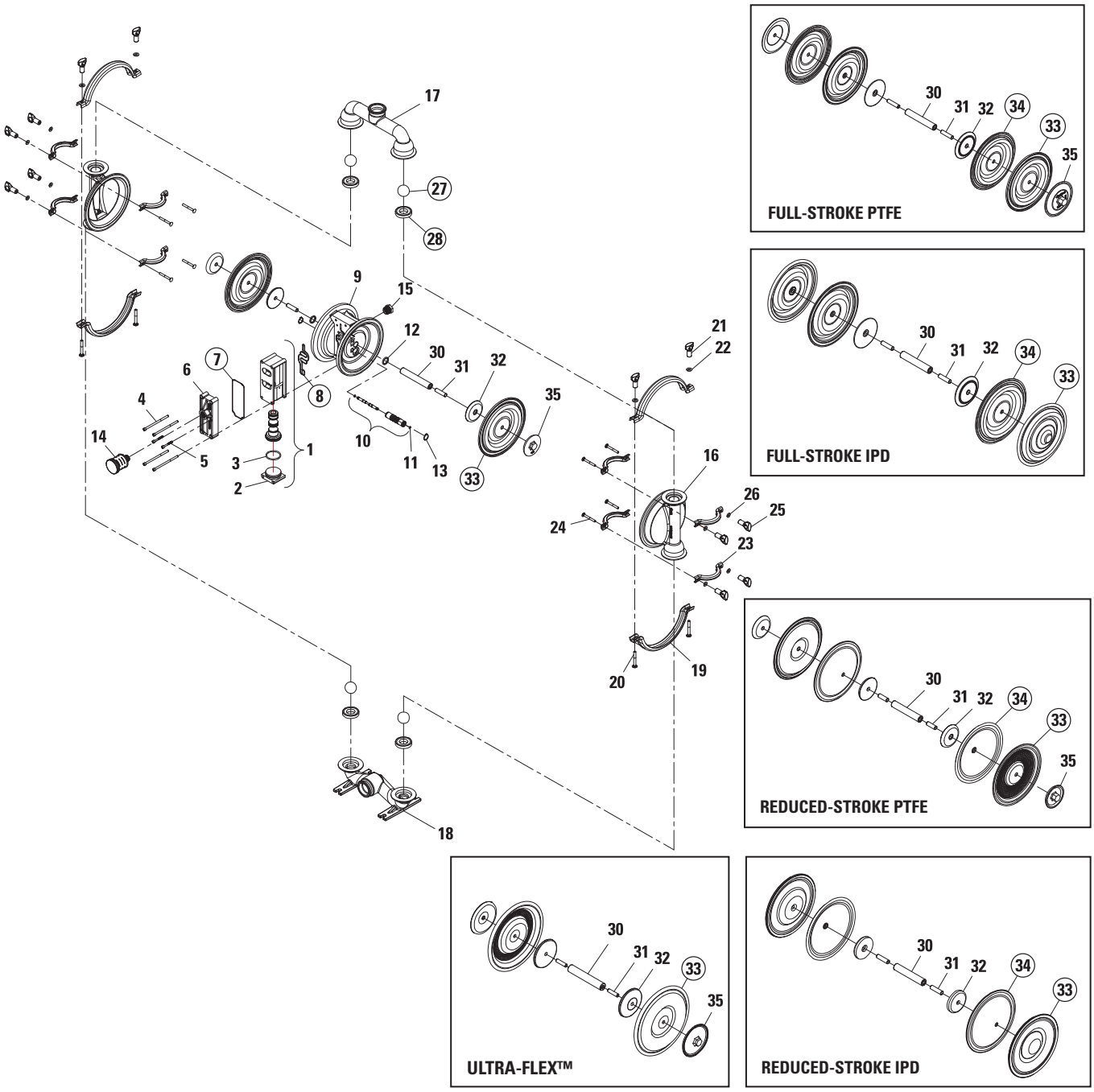

LW0175, Rev. A

ALL CIRCLED PART IDENTIFIERS ARE INCLUDED IN REPAIR KITS (see Section 9).

P4 METAL SANIFLO™ 1935/2004/EC (1-Piece Center) PARTS LISTING

Item	Description	Qty.	P4/SSLLL 1935/2004/EC P/N
AIR DISTRIBUTION COMPONENTS			
1	Air Valve Assembly, Pro-Flo [1]	1	04-2000-13-700
2	End Cap	1	04-2330-13-700
3	O-Ring (-225), End Cap (Ø1.859" x Ø.139")	1	04-2390-52-700
4	Screw, SHC, Air Valve (1/4"-20 x 4 1/2")	4	01-6000-03
5	Self Tapping Screw, SHC, Air Valve (#10-16 x 1-3/4")	2	04-6351-03
6	Muffler Plate, Pro-Flo	1	04-3180-13-700
7	Gasket, Muffler Plate, Pro-Flo	1	04-3500-52-700
8	Gasket, Air Valve, Pro-Flo	1	04-2600-52-700
9	Center Section Assembly, Pro-Flo [2]	1	04-3150-13-700
10	Pilot Sleeve Assembly	1	04-3880-99
11	O-Ring (-009), Pilot Spool Retaining (Ø.208" x Ø.070")	2	04-2650-49-700
12	Seal, Shaft	2	08-3210-55-225
13	Retaining Ring	2	04-3890-03
14	Muffler 3/4" MNPT	1	04-3510-99R
15	Bushing, Reducer, 3/4" MNPT to 1/2" FNPT	1	04-6950-13-700
WETTED PATH COMPONENTS			
16	Liquid Chamber	2	04-5000-03P
17	Manifold, Discharge Tri-Clamp	1	04-5020-03-70P
18	Manifold, Footed Inlet Tri-Clamp	1	04-5080-03-70P
19	Large Clamp Band Assembly	2	04-7330-03-70
20	RHSN Bolt, Large Clamp Band (5/16"-18 x 2-1/2")	4	04-6070-03
21	Wing Nut, Large Clamp Band (5/16"-18)	4	08-6661-10
22	Washer, Brass Flat (Ø.340" x Ø.750" x .063")	4	08-6700-07-70
23	Small Clamp Band Assembly	8	04-7100-03-70
24	RHSN Bolt, Small Clamp Band (1/4"-20 x 2-1/4")	8	01-6070-03
25	Wing Nut, Small Clamp Band (1/4"-20)	8	04-6651-10
26	Washer, Brass Flat (Ø.251" x Ø.620" x .063")	8	04-6700-07-70
VALVE BALLS/VALVE SEATS/VALVE O-RINGS			
27	Ball, Valve, Pkg 4	1	*
28	Seat, Valve, Pkg 4	1	*
	Seat, Valve, Stainless Steel	4	04-1121-03E
29	O-Ring (-226), Valve Seat (Ø.1.984" x Ø.139"), (Not Shown), Pkg 4	1	04-1200-55E
FULL-STROKE RUBBER/TPE/PTFE COMPONENTS			
30	Shaft	1	04-3800-03-700
31	Stud, Shaft (1/2"-20 x 1-7/8")	2	08-6150-08
32	Piston, Inner	2	04-3700-01-700
33	Diaphragm, Primary, Pkg 2	1	*
34	Diaphragm, Back-Up, Pkg 2	1	*
35	Piston, Outer	2	04-4550-03P
ULTRA-FLEX COMPONENTS			
30	Shaft	1	04-3830-03-700
31	Stud, Shaft (3/8-16 x 1-1/2")	2	04-6152-08
32	Piston, Inner	2	04-3760-01-700
33	Diaphragm Primary, Pkg 2	1	*
35	Piston, Outer	2	02-4550-03P

Item	Description	Qty.	P4/SSLLL 1935/2004/EC P/N
REDUCED STROKE PTFE COMPONENTS			
30	Shaft	1	04-3820-03-700
31	Stud, Shaft (1/2-20 x 1-1/2")	2	04-6150-08
32	Piston, Inner	2	04-3752-01
33	Diaphragm, Primary, Pkg 2	1	*
34	Diaphragm, Back-Up, Pkg 2	1	*
35	Piston, Outer	2	04-4600-03P
REDUCED STROKE IPD COMPONENTS			
30	Shaft	1	04-3820-03-700
31	Stud, Shaft (1/2-20 x 1-1/2")	2	04-6150-08
32	Piston, Inner	2	04-3755-01
33	Diaphragm, Primary, Pkg 2	1	*
34	Diaphragm, Back-Up, Pkg 2	1	*
35	Piston, Outer	2	N/A
FULL-STROKE IPD COMPONENTS			
30	Shaft	1	04-3800-03-700
31	Stud, Shaft (1/2-20 x 1-7/8")	2	08-6150-08
32	Piston, Inner	2	04-3700-01-700
33	Diaphragm, Primary, Pkg 2	1	*
34	Diaphragm, Back-Up, Pkg 2	1	*
35	Piston, Outer	2	N/A

LW0097, Rev. B

[1] Air Valve Assembly includes items 2 and 3.
[2] Plastic Center Block Assembly includes items 14 and 20.
All boldface items are primary wear parts.

PX4 METAL

Full-Stroke Diaphragm-Fitted

EXPLODED VIEW

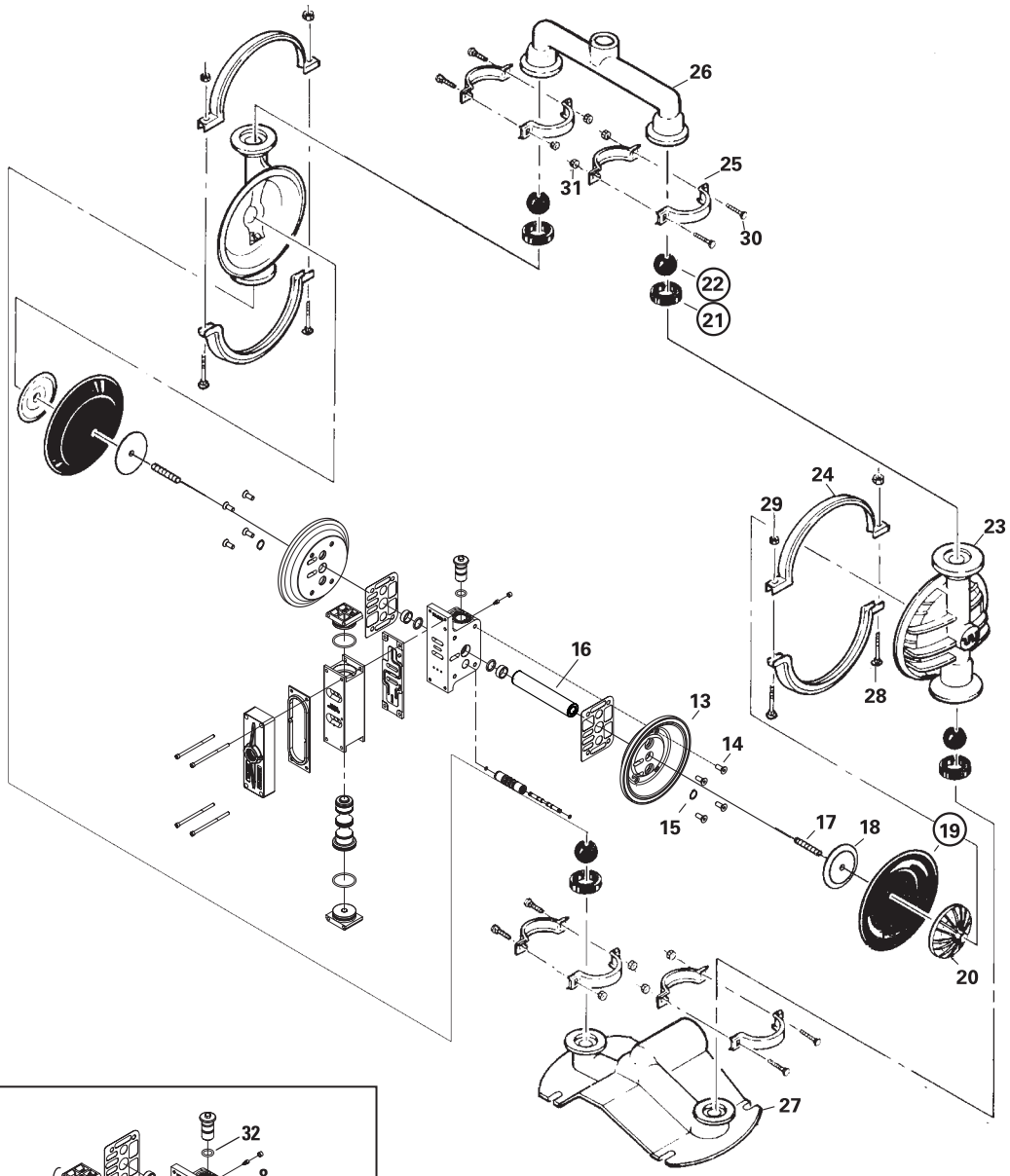

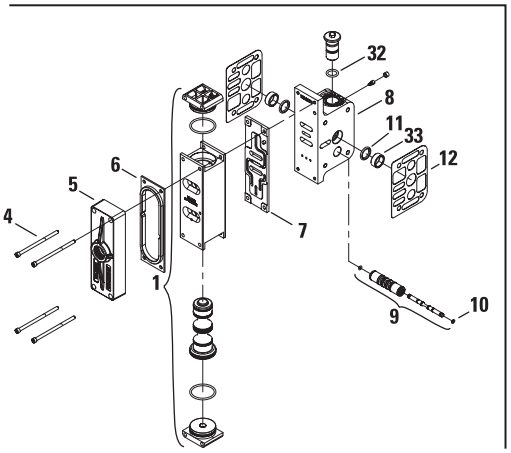

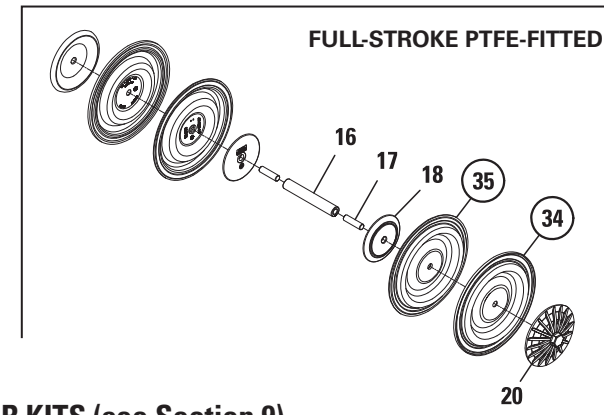

ALL CIRCLED PART IDENTIFIERS ARE INCLUDED IN REPAIR KITS (see Section 9).

PX4 METAL Full-Stroke Diaphragm-Fitted PARTS LISTING

Item	Description	Qty.	PX4/AAAAA/ P/N	PX4/WWAAA/ P/N	PX4/SSAAA/ P/N	PX4/SSAAA/0070 P/N	PX4/SSSSS P/N	PX4/SSSSS/0070 P/N
1	Pro-Flo X™ Assembly, Air Valve[1]	**1**	**04-2030-01**	04-2030-01	**04-2030-01**	04-2030-01	04-2030-03	04-2030-03
2	O-Ring (-225), End Cap (1.859 x .139)	2	04-3290-52-700	04-3290-52-700	04-3290-52-700	04-3290-52-700	04-3290-52-700	04-3290-52-700
3	End Cap	2	04-2340-01	04-2340-01	04-2340-01	04-2340-01	04-2340-03	04-2340-03
4	Screw, SHC, Air Valve (1/4"-20 x 4 1/2")	4	01-6000-03	01-6000-03	01-6000-03	01-6000-03	01-6000-03	01-6000-03
5	Muffler Plate, Pro-Flo V™	1	04-3185-01	04-3185-01	04-3185-01	04-3185-01	04-3185-03	04-3185-03
6	**Gasket, Muffler Plate, Pro-Flo V™**	**1**	**04-3502-52**	**04-3502-52**	**04-3502-52**	**04-3502-52**	**04-3502-52**	**04-3502-52**
7	**Gasket, Air Valve, Pro-Flo V™**	**1**	**04-2620-52**	**04-2620-52**	**04-2620-52**	**04-2620-52**	**04-2620-52**	**04-2620-52**
8	Center Block Assembly, Pro-Flo X™ [2]	1	08-3126-01	08-3126-01	08-3126-01	08-3126-01	08-3126-03	08-3126-03
9	**Pilot Sleeve Assembly**	**1**	**04-3880-99**	**04-3880-99**	**04-3880-99**	**04-3880-99**	**04-3880-99**	**04-3880-99**
10	**Pilot Spool Retaining O-Ring**	**2**	**04-2650-49-700**	**04-2650-49-700**	**04-2650-49-700**	**04-2650-49-700**	**04-2650-49-700**	**04-2650-49-700**
11	**Shaft Seal**	**2**	**08-3210-55-225**	**08-3210-55-225**	**08-3210-55-225**	**08-3210-55-225**	**08-3210-55-225**	**08-3210-55-225**
12	**Gasket, Center Block Pro-Flo V™**	**2**	**04-3529-52**	**04-3529-52**	**04-3529-52**	**04-3529-52**	**04-3529-52**	**04-3529-52**
13	Air Chamber, Pro-Flo	2	04-3660-01	04-3660-01	04-3660-01	04-3660-01	04-3660-03	04-3660-03
14	Screw, HSFHS (3/8"-16 x 1")	8	71-6250-08	71-6250-08	71-6250-08	71-6250-08	71-6250-08	71-6250-08
15	Retaining Ring	2	04-3890-03	04-3890-03	04-3890-03	04-3890-03	04-3890-03	04-3890-03
16	Shaft	1	04-3800-03-700	04-3800-03-700	04-3800-03-700	04-3800-03-700	04-3800-03-700	04-3800-03-700
17	Shaft Stud (P4/WAPP:Bolt)[3]	2	08-6150-08	04-6091-08	08-6150-08	08-6150-08	08-6150-08	08-6150-08
18	Piston, Inner	2	04-3700-01-700	04-3700-01-700	04-3700-01-700	04-3700-01-700	04-3700-01-700	04-3700-01-700
19	**Diaphragm**	**2**	*	*	*	**04-1010-56**	*	**04-1010-56**
20	Piston, Outer	2	04-4552-01	04-4550-08	04-4550-03	04-4550-03P	04-4550-03	04-4550-03P
21	**Seat, Valve**	**4**	*	*	*	**04-1120-56**	*	**04-1120-56**
22	**Ball, Valve**	**4**	*	*	*	**04-1080-56**	*	**04-1080-56**
23	Liquid Chamber	2	04-5000-01	04-5000-02	04-5000-03	04-5000-03P	04-5000-03	04-5000-03P
24	Large Clamp Band Assembly	2	04-7330-08	04-7330-08	04-7330-03	04-7330-03-70	04-7330-03	04-7330-03-70
25	Small Clamp Band Assembly	4	04-7100-08	04-7100-08	04-7100-03	04-7100-03-70	04-7100-03	04-7100-03-70
26	Manifold, Discharge	1	04-5020-01	04-5020-02	04-5020-03	04-5020-03-70P	04-5020-03	04-5020-03-70P
27	Manifold, Footed Inlet	1	04-5080-01	04-5080-02	04-5080-03	04-5080-03-70P	04-5080-03	04-5080-03-70P
28	Carriage Bolt, Lrg Clamp Band (5/16"-18 x 2-1/2")	4	04-6070-08	04-6070-08	04-6070-03	04-6070-03	04-6070-03	04-6070-03
29	Hex Nut, Large Clamp Band (5/16"-18)	4	04-6420-08	04-6420-08	08-6400-03	08-6661-10	08-6400-03	08-6661-10
30	Carriage Bolt, Small Clamp Band (1/4"-20 x 2")	8	04-6050-08	04-6050-08	01-6070-03	01-6070-03	01-6070-03	01-6070-03
31	Hex Nut, Small Clamp Band (1/4"-20)	8	04-6400-08	04-6400-08	04-6400-03	04-6651-10	04-6400-03	04-6651-10
32	**O-Ring (-210), Adjuster (Ø.734" x Ø.139")**	**1**	**02-3200-52**	**02-3200-52**	**02-3200-52**	**02-3200-52**	**02-3200-52**	**02-3200-52**
33	**Bushing, Shaft**	**2**	**08-3306-13**	**08-3306-13**	**08-3306-13**	**08-3306-13**	**08-3306-13**	**08-3306-13**
34	**Diaphragm, Primary Full Stroke PTFE**	**2**	*	*	*	*	*	*
35	**Diaphragm, Backup Full Stroke PTFE**	**2**	*	*	*	*	*	*
	Muffler (not shown)	1	15-3510-99R	15-3510-99R	15-3510-99R	15-3510-99R	15-3510-99R	15-3510-99R
	Washer, Flat, (1/4") (Not Shown)	8	N/A	N/A	N/A	04-6700-07-70	N/A	04-6700-07-70
	Washer, Flat, (5/16") (Not Shown)	4	N/A	N/A	N/A	08-6700-07-70	N/A	08-6700-07-70

* See elastomer chart - Section 9
[1] Air Valve Assembly includes items 2 and 3.
[2] Center Block Assembly includes items 11, 32 and 33.
[3] Rubber/TPE-fitted cast iron pumps use 1/2"-20 x 1-1/2" hex bolt (P/N 04-6091-08) with washer (P/N 04-6800-08).

Aluminum pumps are available with a screen base. Requires 1 Screen (P/N 04-5620-01, 4 bolts (P/N 04-6140-08) and 4 washers (P/N 15-6720-08).

All boldface items are primary wear parts.

PX4 METAL

Reduced-Stroke Diaphragm-Fitted

EXPLODED VIEW

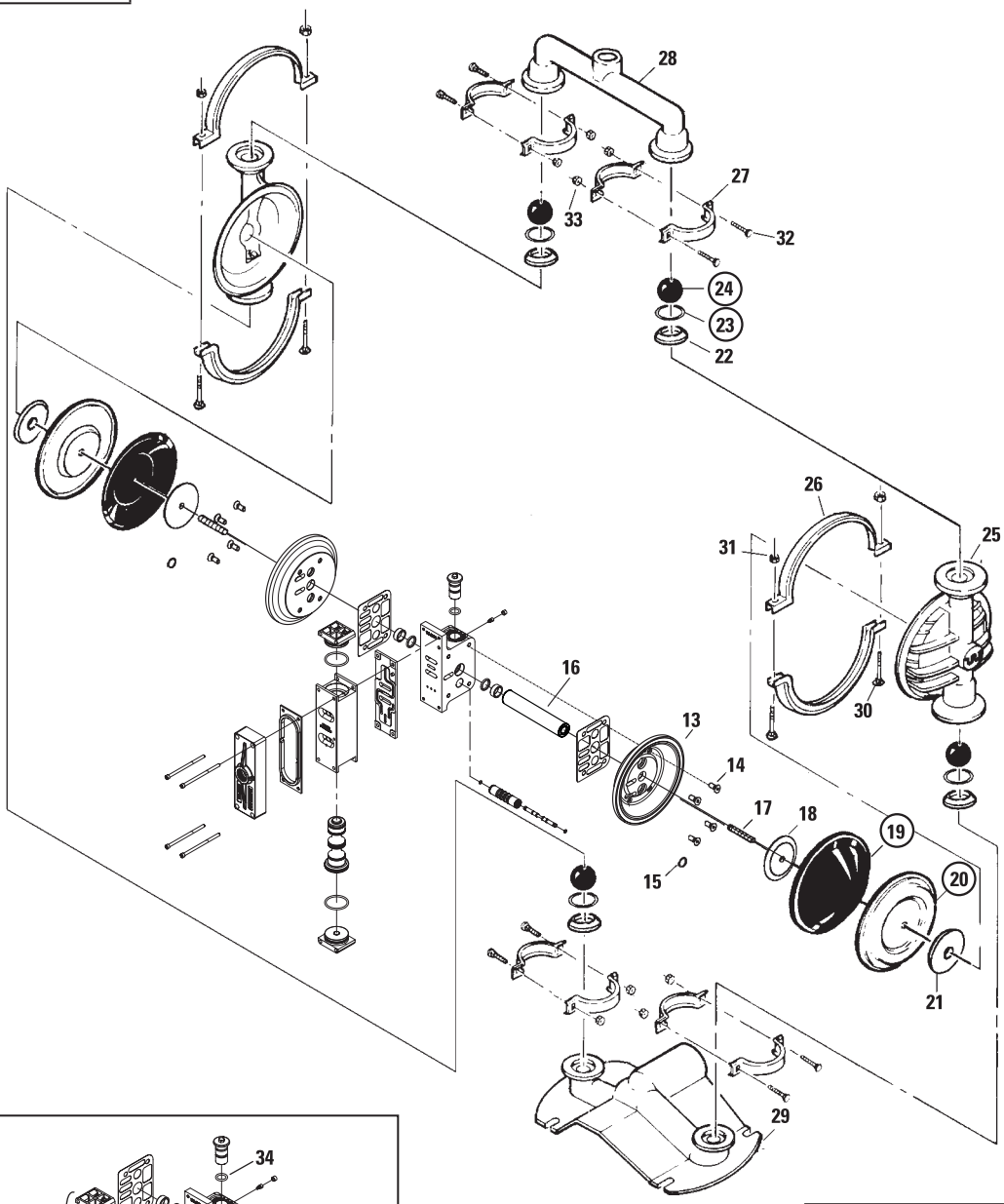

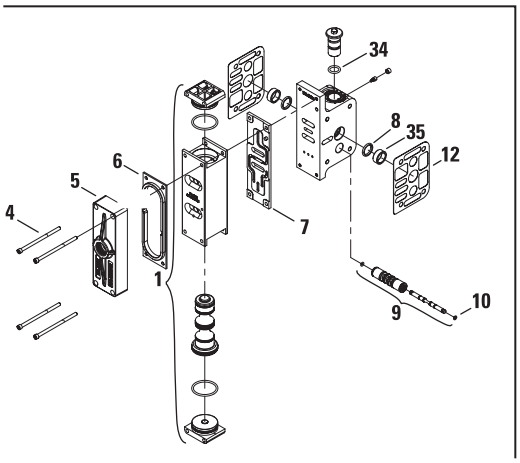

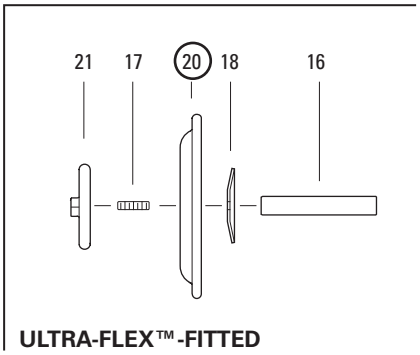

ALL CIRCLED PART IDENTIFIERS ARE INCLUDED IN REPAIR KITS (see Section 9).

PX4 METAL Reduced-Stroke Diaphragm-Fitted PARTS LISTING

Item	Description	Qty.	PX4/AAAAA/ P/N	PX4/WWAAA/ P/N	PX4/SSAAA/ P/N	PX4/SSAAA/0070 P/N	PX4/SSSSS P/N	PX4/SSSSS/0070 P/N
1	Pro-Flo X™ Assembly, Air Valve[1]	1	04-2030-01	04-2030-01	04-2030-01	04-2030-01	04-2030-03	04-2030-03
2	O-Ring (-225), End Cap (1.859 x .139)	2	04-3290-52-700	04-3290-52-700	04-3290-52-700	04-3290-52-700	04-3290-52-700	04-3290-52-700
3	End Cap	2	04-2340-01	04-2340-01	04-2340-01	04-2340-01	04-2340-03	04-2340-03
4	Screw, SHC, Air Valve (1/4"-20 x 4 1/2")	4	01-6000-03	01-6000-03	01-6000-03	01-6000-03	01-6000-03	01-6000-03
5	Muffler Plate, Pro-Flo V™	1	04-3185-01	04-3185-01	04-3185-01	04-3185-01	04-3185-03	04-3185-03
6	**Gasket, Muffler Plate, Pro-Flo V™**	**1**	**04-3502-52**	**04-3502-52**	**04-3502-52**	**04-3502-52**	**04-3502-52**	**04-3502-52**
7	**Gasket, Air Valve, Pro-Flo V™**	**1**	**04-2620-52**	**04-2620-52**	**04-2620-52**	**04-2620-52**	**04-2620-52**	**04-2620-52**
8	Center Block Assembly, Pro-Flo X™ [2]	1	08-3126-01	08-3126-01	08-3126-01	08-3126-01	08-3126-03	08-3126-03
9	**Pilot Sleeve Assembly**	**1**	**04-3880-99**	**04-3880-99**	**04-3880-99**	**04-3880-99**	**04-3880-99**	**04-3880-99**
10	**Pilot Spool Retaining O-Ring**	**2**	**04-2650-49-700**	**04-2650-49-700**	**04-2650-49-700**	**04-2650-49-700**	**04-2650-49-700**	**04-2650-49-700**
11	**Shaft Seal**	**2**	**08-3210-55-225**	**08-3210-55-225**	**08-3210-55-225**	**08-3210-55-225**	**08-3210-55-225**	**08-3210-55-225**
12	**Gasket, Center Block Pro-Flo V™**	**2**	**04-3529-52**	**04-3529-52**	**04-3529-52**	**04-3529-52**	**04-3529-52**	**04-3529-52**
13	Air Chamber, Pro-Flo	2	04-3660-01	04-3660-01	04-3660-01	04-3660-01	04-3660-03	04-3660-03
14	Screw, HSFHS (3/8"-16 x 1")	8	71-6250-08	71-6250-08	71-6250-08	71-6250-08	71-6250-08	71-6250-08
15	Retaining Ring	2	04-3890-03	04-3890-03	04-3890-03	04-3890-03	04-3890-03	04-3890-03
16	Shaft	1	04-3820-03-700	04-3820-03-700	04-3820-03-700	04-3820-03-700	04-3820-03-700	04-3820-03-700
	Shaft, Ultra-Flex™	1	04-3830-03-700	04-3830-03-700	04-3830-03-700	N/A	04-3830-03-700	N/A
17	Shaft Stud	2	04-6150-08	04-6150-08	04-6150-08	04-6150-08	04-6150-08	04-6150-08
	Shaft Stud, Ultra-Flex™	2	N/A	04-6152-08	04-6152-08	N/A	04-6152-08	N/A
18	Piston, Inner	2	04-3752-01	04-3752-01	04-3752-01	04-3752-01	04-3752-01	04-3752-01
	Piston Inner, Ultra-Flex™	2	04-3760-01-700	04-3760-01-700	04-3760-01-700	N/A	04-3760-01-700	N/A
19	**Diaphragm, Back-Up[3]**	**2**	*	*	*	*	*	*
20	**Diaphragm**	**2**	*	*	*	*	*	*
21	Piston, Outer	2	04-4600-01	04-4600-03	04-4600-03	04-4600-03P	04-4600-03P	04-4600-03P
	Piston Outer, Ultra-Flex™	2	04-4560-01	04-4560-02	02-4550-03	N/A	02-4550-03	N/A
22	**Seat, Valve**	**4**	**04-1121-01**	**04-1121-08**	**04-1121-03**	**04-1121-03P**	**04-1121-03**	**04-1121-03P**
23	**Valve Seat O-Ring (Ø2.609" x Ø.139")**	**4**	**04-1200-55**	**04-1200-55**	**04-1200-55**	**04-1200-55**	**04-1200-55**	**04-1200-55**
24	**Ball, Valve**	**4**	**04-1080-55**	**04-1080-55**	**04-1080-55**	**04-1080-55**	**04-1080-55**	**04-1080-55**
25	Liquid Chamber	2	04-5000-01	04-5000-02	04-5000-03	04-5000-03P	04-5000-03	04-5000-03P
26	Large Clamp Band Assembly	2	04-7330-03	04-7330-03	04-7330-03	04-7330-03-70	04-7330-03	04-7330-03-70
27	Small Clamp Band Assembly	4	04-7100-03	04-7100-03	04-7100-03	04-7100-03-70	04-7100-03	04-7100-03-70
28	Manifold, Discharge	1	04-5020-01	04-5020-02	04-5020-03	04-5020-03-70P	04-5020-03	04-5020-03-70P
29	Manifold, Footed Inlet	1	04-5080-01	04-5080-02	04-5080-03	04-5080-03-70P	04-5080-03	04-5080-03-70P
30	Carriage Bolt, Lrg Clamp Band (5/16"-18 x 2-1/2")	4	04-6070-03	04-6070-03	04-6070-03	04-6070-03	04-6070-03	04-6070-03
31	Hex Nut, Large Clamp Band (5/16"-18)	4	08-6400-03	08-6400-03	08-6400-03	08-6661-10	08-6661-10	08-6661-10
32	Carriage Bolt, Small Clamp Band (1/4"-20 x 2")	8	01-6070-03	01-6070-03	01-6070-03	01-6070-03	01-6070-03	01-6070-03
33	Hex Nut, Small Clamp Band (1/4"-20)	8	04-6400-08	04-6400-08	04-6400-03	04-6651-10	04-6400-03	04-6651-10
34	**O-Ring (-210), Adjuster (Ø.734" x Ø.139")**	**1**	**02-3200-52**	**02-3200-52**	**02-3200-52**	**02-3200-52**	**02-3200-52**	**02-3200-52**
35	**Bushing, Shaft**	**2**	**08-3306-13**	**08-3306-13**	**08-3306-13**	**08-3306-13**	**08-3306-13**	**08-3306-13**
	Muffler (not shown)	1	15-3510-99R	15-3510-99R	15-3510-99R	15-3510-99R	15-3510-99R	15-3510-99R
	Washer, Flat, (1/4") (Not Shown)	8	N/A	N/A	N/A	04-6700-07-70	N/A	04-6700-07-70
	Washer, Flat, (5/16") (Not Shown)	4	N/A	N/A	N/A	08-6700-07-70	N/A	08-6700-07-70

[1] Air Valve Assembly includes items 2 and 3.
[2] Center Block Assembly includes items 11, 34 and 35.
[3] Saniflex™ back-up diaphragms (P/N 04-1060-56) for PTFE-fitted pumps available upon request.

BSP-fitted pumps are available. Contact your distributor for part numbers.
Fluoro-Seal™ O-rings available upon request.
0070 Specialty Code = Saniflo™ FDA

All boldface items are primary wear parts.

EXPLODED VIEW AND PARTS LISTING

PX4 METAL SANIFLO™ | 1935/2004/EC | EXPLODED VIEW

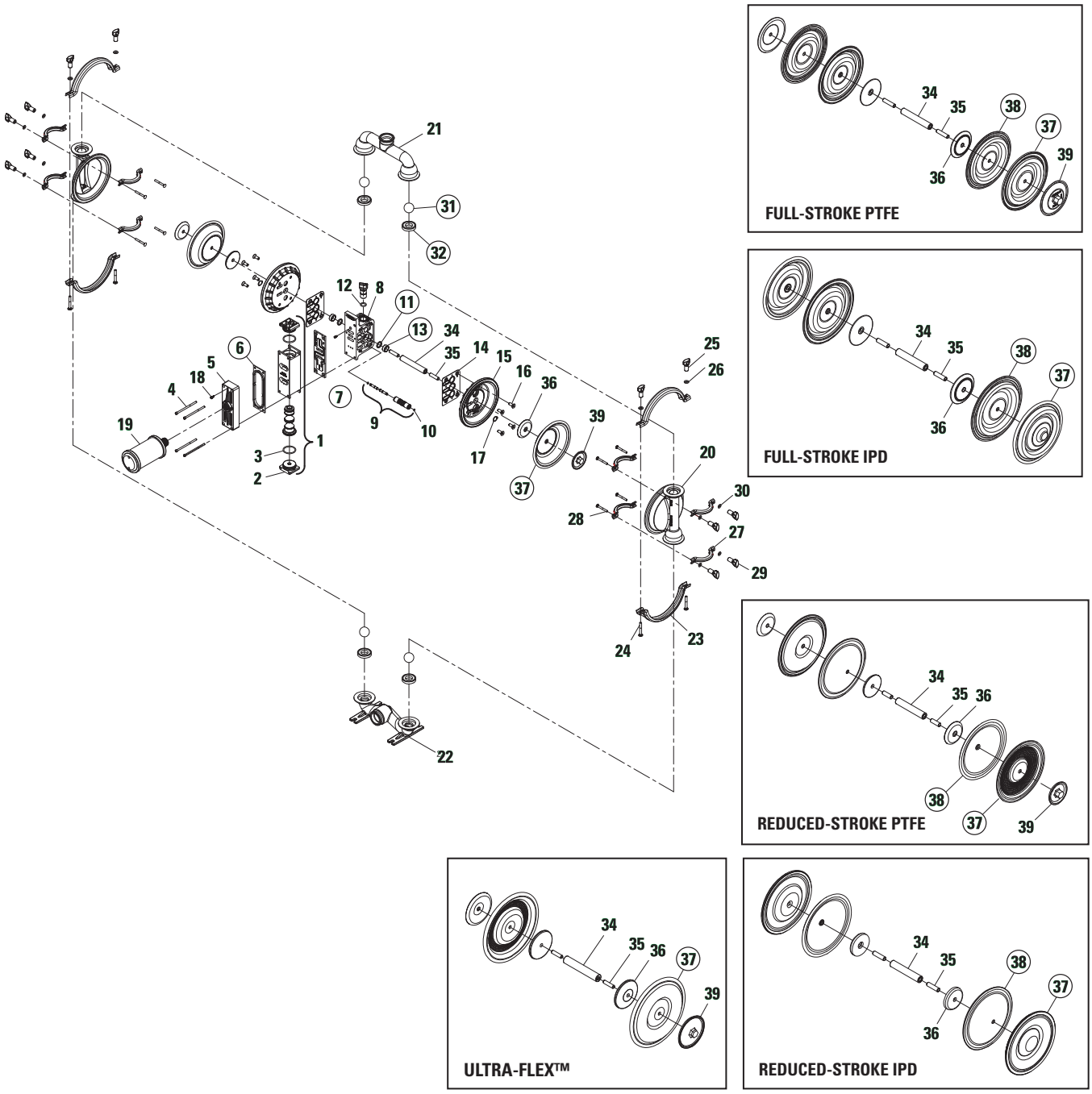

LW0100, Rev. A

ALL CIRCLED PART IDENTIFIERS ARE INCLUDED IN REPAIR KITS (see Section 9).

PX4 METAL SANIFLO™ 1935/2004/EC PARTS LISTING

Item	Description	Qty.	XPX4/SSAAA/ 1935/2004/EC P/N	XPX4/SSNNN/ 1935/2004/EC P/N	XPX4/SSSSS/ 1935/2004/EC P/N
	AIR DISTRIBUTION COMPONENTS				
1	**Air Valve Assembly, Pro-Flo V [1]**	**1**	**04-2030-01**	**04-2030-06**	**04-2030-03**
2	**O-Ring (-225), End Cap (Ø1.859" x Ø.139")**	**2**	**04-2390-52-700**	**04-2390-52-700**	**04-2390-52-700**
3	End Cap	2	04-2340-01	04-2340-06	04-2340-03
4	Screw, SHC, Air Valve (1/4"-20 x 4-1/2")	4	01-6000-03	01-6000-03	01-6000-03
5	Muffler Plate, Pro-Flo V TM	1	04-3185-01	04-3185-06	04-3185-03
6	**Gasket, Muffler Plate, Pro-Flo V™**	**1**	**04-3502-52**	**04-3502-52**	**04-3502-52**
7	**Gasket, Air Valve, Pro-Flo V™**	**1**	**04-2620-52**	**04-2620-52**	**04-2620-52**
8	Center Block Assembly, Pro-Flo X™ [2]	1	08-3126-01	08-3126-06	08-3126-03
9	**Pilot Sleeve Assembly**	**1**	**04-3880-99**	**04-3880-99**	**04-3880-99**
10	**O-Ring (-009), Pilot Spool Retaining (Ø.208" x Ø.070")**	**2**	**04-2650-49-700**	**04-2650-49-700**	**04-2650-49-700**
11	**Seal, Shaft**	**2**	**08-3210-55-225**	**08-3210-55-225**	**08-3210-55-225**
12	**O-Ring (-210), Adjuster (Ø.734" x Ø.139")**	**2**	**02-3200-52**	**02-3200-52**	**02-3200-52**
13	**Bushing, Shaft**	**2**	**08-3306-13**	**08-3306-13**	**08-3306-13**
14	**Gasket, Center Block Pro-Flo V™**	**2**	**04-3529-52**	**04-3529-52**	**04-3529-52**
15	Air Chamber, Pro-Flo	2	04-3660-01	04-3660-06	04-3660-03
16	Screw, SFCHC (3/8"-16 x 1")	8	71-6250-08	71-6250-03	71-6250-03
17	Retaining Ring	2	04-3890-03	04-3890-03	04-3890-03
18	Grounding Screw, 10-32 x .50" Self Tapping	1	04-6345-08	04-6345-08	04-6345-08
19	Muffler, Metal 1" MNPT	1	15-3510-99R	15-3510-99R	15-3513-99R
	WETTED PATH COMPONENTS				
20	Liquid Chamber	2	04-5000-03P	04-5000-03P	04-5000-03P
21	Manifold, Discharge Tri-Clamp	1	04-5020-03-70P	04-5020-03-70P	04-5020-03-70P
22	Manifold, Footed Inlet Tri-Clamp	1	04-5080-03-70P	04-5080-03-70P	04-5080-03-70P
23	Large Clamp Band Assembly	2	04-7330-03-70	04-7330-03-70	04-7330-03-70
24	RHSN Bolt, Large Clamp Band (5/16"-18 x 2-1/2")	4	04-6070-03	04-6070-03	04-6070-03
25	Wing Nut, Large Clamp Band (5/16"-18)	4	08-6661-10	08-6661-10	08-6661-10
26	Washer, Brass Flat (Ø.340" x Ø.750" x .062")	4	08-6700-07-70	08-6700-07-70	08-6700-07-70
27	Small Clamp Band Assembly	8	04-7100-03-70	04-7100-03-70	04-7100-03-70
28	RHSN Bolt, Small Clamp Band (1/4"-20 x 2-1/4")	8	01-6070-03	01-6070-03	01-6070-03
29	Wing Nut, Small Clamp Band (1/4"-20)	8	04-6651-10	04-6651-10	04-6651-10
30	Washer, Brass Flat (Ø.251" x Ø.620" x .062")	8	04-6700-07-70	04-6700-07-70	04-6700-07-70
	VALVE BALLS/VALVE SEATS/VALVE O-RINGS				
31	**Ball, Valve, Pkg 4**	**1**	*	*	*
32	**Seat, Valve, Pkg 4**	**1**	*	*	*
	Seat, Valve, Stainless Steel	**4**	**04-1121-03E**	**04-1121-03E**	**04-1121-03E**
33	**O-Ring (-226), Valve Seat (Ø.1.984" x Ø.139"), (Not Shown), Pkg 4**	**1**	**04-1200-55E**	**04-1200-55E**	**04-1200-55E**
	FULL-STROKE RUBBER/TPE/PTFE COMPONENTS				
34	Shaft	1	04-3800-03-700	04-3800-03-700	04-3800-03-700
35	Stud, Shaft (1/2"-20 x 1-7/8")	2	08-6150-08	08-6150-08	08-6150-08
36	Piston, Inner	2	04-3700-01-700	04-3700-01-700	04-3700-01-700
37	**Diaphragm, Primary, Pkg 2**	**1**	*	*	*
38	**Diaphragm, Back-Up, Pkg 2**	**1**	*	*	*
39	Piston, Outer	2	04-4550-03P	04-4550-03P	04-4550-03P
	ULTRA-FLEX COMPONENTS				
34	Shaft	1	04-3830-03-700	04-3830-03-700	04-3830-03-700
35	Stud, Shaft (3/8-16 x 1-1/2")	2	04-6152-08	04-6152-08	04-6152-08
36	Piston, Inner	2	04-3760-01-700	04-3760-01-700	04-3760-01-700
37	**Diaphragm, Primary, Pkg 2**	**1**	*	*	*
39	Piston, Outer	2	02-4550-03P	02-4550-03P	02-4550-03P

LW0087 Rev. A

[1] Air Valve Assembly includes items 2 and 3.
[2] Metal Center Block Assembly includes items 11 and 12.
All boldface items are primary wear parts.

PX4 METAL SANIFLO™ 1935/2004/EC EXPLODED VIEW

Item	Description	Qty.	XPX4/SSAAA/ 1935/2004/EC P/N	XPX4/SSNNN/ 1935/2004/EC P/N	XPX4/SSSSS/ 1935/2004/EC P/N
REDUCED STROKE PTFE COMPONENTS					
34	Shaft	1	04-3820-03-700	04-3820-03-700	04-3820-03-700
35	Stud, Shaft (1/2-20 x 1-1/2")	2	04-6150-08	04-6150-08	04-6150-08
36	Piston, Inner	2	04-3752-01	04-3752-01	04-3752-01
37	**Diaphragm Primary, Pkg 2**	**1**	*	*	*
38	**Diaphragm, Back-Up, Pkg 2**	**1**	*	*	*
39	Piston, Outer	2	04-4600-03P	04-4600-03P	04-4600-03P
REDUCED STROKE IPD COMPONENTS					
34	Shaft	1	04-3820-03-700	04-3820-03-700	04-3820-03-700
35	Stud, Shaft (1/2-20 x 1-1/2")	2	04-6150-08	04-6150-08	04-6150-08
36	Piston, Inner	2	04-3755-01	04-3755-01	04-3755-01
37	**Diaphragm, Primary, Pkg 2**	**1**	*	*	*
38	**Diaphragm, Back-Up, Pkg 2**	**1**	*	*	*
39	Piston, Outer	2	N/A	N/A	N/A
FULL-STROKE IPD COMPONENTS					
34	Shaft	1	04-3800-03-700	04-3800-03-700	04-3800-03-700
35	Stud, Shaft (1/2-20 x 1-7/8")	2	08-6150-08	08-6150-08	08-6150-08
36	Piston, Inner	2	04-3700-01-700	04-3700-01-700	04-3700-01-700
37	**Diaphragm, Primary, Pkg 2**	**1**	*	*	*
38	**Diaphragm, Back-Up, Pkg 2**	**1**	*	*	*
39	Piston, Outer	2	N/A	N/A	N/A

LW0087 Rev. A

[1] Air Valve Assembly includes items 2 and 3.
[2] Metal Center Block Assembly includes items 11 and 12.
All boldface items are primary wear parts.

ELASTOMER OPTIONS

P4 & PX4 METAL

MATERIAL	DIAPHRAGMS (2)	ULTRA-FLEX™ DIAPHRAGMS (2)	REDUCED-STROKE BACK-UP DIAPHRAGMS (2)	FULL-STROKE BACK-UP DIAPHRAGMS (2)	VALVE BALLS (4)	VALVE SEATS (4)	VALVE SEAT O-RINGS (4)
Neoprene	04-1010-51	04-1020-51	04-1060-51	N/A	04-1080-51	04-1120-51*	N/A
Buna-N	04-1010-52	04-1020-52	N/A	N/A	04-1080-52	04-1120-52*	N/A
Viton®	04-1010-53	04-1020-53	N/A	N/A	04-1080-53	04-1120-53*	N/A
EPDM	04-1010-54	04-1020-54	04-1060-54	N/A	04-1080-54	04-1120-54*	N/A
PTFE	04-1010-55	N/A	N/A	N/A	04-1080-55	N/A	04-1200-55
Full-Stroke PTFE	04-1040-55	N/A	N/A	N/A	N/A	N/A	N/A
Saniflex™	04-1010-56	N/A	04-1060-56	04-1065-56	04-1080-56	04-1120-56*	N/A
Polyurethane	04-1010-50	N/A	N/A	N/A	04-1080-50	04-1120-50*	N/A
Wil-Flex™	04-1010-58	N/A	N/A	04-1065-57	04-1080-58	04-1120-58*	N/A
Aluminum	N/A	N/A	N/A	N/A	N/A	04-1121-01	N/A
316 Stainless Steel	N/A	N/A	N/A	N/A	N/A	04-1121-03	N/A
Alloy C	N/A	N/A	N/A	N/A	N/A	04-1121-04	N/A
Mild Steel	N/A	N/A	N/A	N/A	N/A	04-1121-08	N/A

*NOTE: Rubber/TPE valve seats do not require O-rings.
Backup diaphragms for use with PTFE diaphragms only.

P4 & PX4 METAL SANIFLO™ 1935/2004/EC

MATERIAL	DIAPHRAGMS	REDUCED-STROKE BACK-UP DIAPHRAGMS	ULTRA-FLEX™ DIAPHRAGMS	FULL-STROKE DIAPHRAGMS	FULL-STROKE BACK-UP DIAPHRAGMS
FDA BUNA-N®	04-1010-69E	N/A	04-1020-52E	N/A	N/A
FDA EPDM	04-1010-74E	04-1060-54E	04-1020-54E	N/A	N/A
FDA VITON®	N/A	N/A	N/A	N/A	N/A
FDA Wil-Flex™	N/A	N/A	N/A	04-1040-55E	04-1065-57E
SANIFLEX™	04-1010-56E	04-1060-56E	N/A	N/A	04-1065-56E
PTFE	04-1010-55E	N/A	N/A	N/A	N/A

MATERIAL	EZ-INSTALL DIAPHRAGMS	REDUCED-STROKE IPD DIAPHRAGMS	FULL-STROKE IPD DIAPHRAGMS	VALVE BALLS	VALVE SEATS
FDA BUNA-N®	N/A	N/A	N/A	N/A	N/A
FDA EPDM	N/A	N/A	N/A	N/A	N/A
FDA VITON®	N/A	N/A	N/A	08-1080-68-72E	N/A
FDA Wil-Flex™	04-1022-57E	N/A	04-1031-57E	04-1080-57E	04-1120-57E
SANIFLEX™	04-1022-56E	N/A	N/A	04-1080-56E	04-1120-56E
PTFE	N/A	04-1030-72E	N/A	04-1080-55E	N/A

LW0084, Rev. B

ELASTOMER KITS OPTIONS

PRO-FLO®

DESCRIPTION	NEOPRENE	BUNA-N	VITON®	EPDM
Pro-Flo® Original™ Metal	04-9554-51	04-9554-52	04-9554-53	04-9554-54
Pro-Flo® Original™ Metal (Ultra-Flex™)	04-9564-51	04-9564-52	04-9564-53	04-9564-54
DESCRIPTION	**REDUCED-STROKE PTFE**	**WIL-FLEX™**	**SANIFLEX™**	**POLYURETHANE**
Pro-Flo® Original™ Metal	04-9554-55	04-9554-58	04-9554-56	04-9554-50

PRO-FLO X™

DESCRIPTION	NEOPRENE	BUNA-N	VITON®	EPDM
Pro-Flo X™ Original™ Metal	04-9582-51	04-9582-52	04-9582-53	04-9582-54
Pro-Flo X™ Original™ Metal (Ultra-Flex™)	04-9586-51	04-9586-52	04-9586-53	04-9586-54
DESCRIPTION	**REDUCED-STROKE PTFE**	**WIL-FLEX™**	**SANIFLEX™**	**POLYURETHANE**
Pro-Flo X™ Original™ Metal	04-9582-55	04-9582-58	04-9582-56	04-9582-50

WILDEN®

Part of Pump Solutions Group

A DOVER COMPANY

DECLARATION OF COMPLIANCE

STATEMENT OF COMPLIANCE TO REGULATIONS (EC) No 1935/2004
ON MATERIALS AND ARTICLES INTENDED TO COME INTO CONTACT WITH FOOD
(as per Article 16 of REGULATION (EC) No 1935/2004)

Wilden® Pump & Engineering, LLC, 22069 Van Buren Street, Grand Terrace, CA 92313-5607 USA, declares the equipment listed below intended to come into contact with food comply with the requirements of Regulation (EC) No 1935/2004 of 27th October 2004 and (EC) No 2023/2006 of 22nd December 2006.

- **Saniflo™ HS Models:**
  (PX,XPX)(2,4,8,15)/(SS,SZ)(SSS,NNN)/(BNU,EPU,FBS,FES,FSS,FWL,FWS,LEL,TEU,TSS,TSU,TWS,ZSS)/(FB,FE,FS,FV,FW,SF,TF,TM)/(FB,FE,FV,TF)/(0770-0789)E
- **13 mm (½") FDA Pro-Flo® & Pro-Flo X™ Models:**
  (P,PX,XPX)1/(SS,SZ)(AAA,GGG,JJJ,LLL,PPP)/(FSS,TEU,TSU)/(FS,TF)/S(FS,TF)/(0067,0070,0120)E
- **25 mm (1") FDA Pro-Flo® Models:**
  P2/(SS,SZ)(LLL,PPP)/(FBS,FES,FSS,FWL,FWS,LEL,TEU,TSS,TSU,TWS)/(FS,TF)/S(FS,TF)/2070E
- **38 mm (1-½") FDA Pro-Flo® & Pro-Flo X™ Models:**
  (P,PX,XPX)4/(SS,SZ)(A,C,L,N,S,V)(AA,LL,NN,PP,SS)/(BNU,EPU,FBS,FES,FSS,FWL,FWS,LEL,TEU,TSS,TSU,TWS,ZSS)/(FB,FE,FS,FV,FW,TF,)/(FS,FW,STF)/(0067,0070,0075,0120)E
- **51 mm (2") FDA Pro-Flo® & Pro-Flo X™ Models:**
  (P,PX,XPX)8/SS(A,C,N,S,V)(AA,NN,PP,SS)/(BNU,EPU,FBS,FES,FSS,FWS,FWL,TEU,TSU,TSS,TWS,ZSS)/(FS,FW,TF)/(FS,FW,STF)/(0070,0075,0120)E
- **76 mm (3") FDA Pro-Flo X™ Models:**
  (PX,XPX)15/SS(A,C,N,S)(AA,SS,PP)/(BNU,EPU,FSS,FWS,TEU,TSU,TSS,TWS,ZSS)/(FS,FW,TF)/(FS,FW,STF)/(0070,0075,0120,0341)E
- **38 mm (1-½") FDA Pro-Flo® SHIFT Models:**
  XPS4/(SS,SZ)(AAA,NNN)/(FBS,FES,FWL,FWS,TSS,TWS.ZSS)/(FS,FW,TF)/(FS,FW,STF)/(0067,0070,0075,0120)E
- **51 mm (2") FDA Pro-Flo® SHIFT Models:**
  XPS8/(SS,SZ)(AAA,NNN)/(FBS,FES,FWL,FWS,TSS,TWS.ZSS)/(FS,FW,TF)/(FS,FW,STF)/(0070,0075,0120)E
- **76 mm (3") FDA Pro-Flo® SHIFT Models:**
  XPS15/(SS,SZ)(AAA,NNN)/(FWS,TSS,TWS,ZSS)/(FS,FW,TF)/(FS,FW,STF)/(0070,0120,0341)E

Materials used in the equipment that are intended to contact food belong to the groups of materials listed in Annex 1 (EC) 1935/2004.
(List of groups of materials and articles that may be covered by specific measures)

5) Rubbers ☒ 8) Metal and Alloy ☒ 10) Plastics ☒

Compliance is subject to material and equipment storage, handling and usage recommended by **Wilden®** in the engineering operation and maintenance manual and supplemental technical publications.

This declaration is based on the following information:

☒ Statements of raw material suppliers

Wilden® will make available to the competent authorities appropriate documentation to demonstrate compliance.

Approved By:

Chris Distaso
Director of Engineering
Date: March 21, 2014

PSG PUMP SOLUTIONS GROUP A DOVER COMPANY

www.psgdover.com

NOTES

NOTES

WILDEN

WARRANTY

Each and every product manufactured by Wilden Pump and Engineering, LLC is built to meet the highest standards of quality. Every pump is functionally tested to insure integrity of operation.

Wilden Pump and Engineering, LLC warrants that pumps, accessories and parts manufactured or supplied by it to be free from defects in material and workmanship for a period of five (5) years from date of installation or six (6) years from date of manufacture, whichever comes first. Failure due to normal wear, misapplication, or abuse is, of course, excluded from this warranty.

Since the use of Wilden pumps and parts is beyond our control, we cannot guarantee the suitability of any pump or part for a particular application and Wilden Pump and Engineering, LLC shall not be liable for any consequential damage or expense arising from the use or misuse of its products on any application. Responsibility is limited solely to replacement or repair of defective Wilden pumps and parts.

All decisions as to the cause of failure are the sole determination of Wilden Pump and Engineering, LLC.

Prior approval must be obtained from Wilden for return of any items for warranty consideration and must be accompanied by the appropriate MSDS for the product(s) involved. A Return Goods Tag, obtained from an authorized Wilden distributor, must be included with the items which must be shipped freight prepaid.

The foregoing warranty is exclusive and in lieu of all other warranties expressed or implied (whether written or oral) including all implied warranties of merchantability and fitness for any particular purpose. No distributor or other person is authorized to assume any liability or obligation for Wilden Pump and Engineering, LLC other than expressly provided herein.

PLEASE PRINT OR TYPE AND FAX TO WILDEN

PUMP INFORMATION

Item # _____ Serial # _____

Company Where Purchased _____

YOUR INFORMATION

Company Name _____

Industry _____

Name _____ Title _____

Street Address _____

City _____ State _____ Postal Code _____ Country _____

Telephone _____ Fax _____ E-mail _____ Web Address _____

Number of pumps in facility? _____ Number of Wilden pumps? _____

Types of pumps in facility (check all that apply): ☐ Diaphragm ☐ Centrifugal ☐ Gear ☐ Submersible ☐ Lobe

☐ Other _____

Media being pumped? _____

How did you hear of Wilden Pump? ☐ Trade Journal ☐ Trade Show ☐ Internet/E-mail ☐ Distributor

☐ Other _____

ONCE COMPLETE, FAX TO (909) 783-3440

NOTE: WARRANTY VOID IF PAGE IS NOT FAXED TO WILDEN

WILDEN PUMP & ENGINEERING, LLC

PSG Brands

ABAQUE™
PERISTALTIC PUMPS
mouvex.com

ALMATEC®
AIR-OPERATED
DOUBLE-DIAPHRAGM PUMPS
almatec.de

AUTOMATIK
PELLETIZING SYSTEMS
maag.com

BLACKMER®
VANE PUMPS & COMPRESSORS
blackmer.com

FLUID DYNAMICS™
POLYMER BLENDING SYSTEMS
fluiddynamics1.com

GRISWOLD™
CENTRIFUGAL PUMPS
griswoldpump.com

MAAG
FILTRATION
PLASTIC MANUFACTURING &
PROCESSING FILTRATION
maag.com

MAAG
INDUSTRIAL PUMPS
GEAR & SCREW PUMPS
maag.com

MAAG
PUMP SYSTEMS
EXTRUSION PUMPS & SYSTEMS
maag.com

MOUVEX®
ECCENTRIC DISC PUMPS,
VANE PUMPS &
COMPRESSORS
mouvex.com

NEPTUNE™
DIAPHRAGM (METERING) PUMPS,
POLYMER SYSTEMS & MIXERS
neptune1.com

QUATTROFLOW™
QUATERNARY DIAPHRAGM
PUMP TECHNOLOGY
quattroflow.com

REDSCREW™
SCREW PUMPS
redscrewpump.com

SYSTEM ONE®
CENTRIFUGAL PUMPS
blackmer.com

WILDEN®
AIR-OPERATED
DOUBLE-DIAPHRAGM PUMPS
wildenpump.com

PSG®
PUMP SOLUTIONS GROUP
A DOVER COMPANY

Where Innovation Flows

WILDEN®
Part of Pump Solutions Group
A DOVER COMPANY

22069 Van Buren St.
Grand Terrace, CA 92313-5607
T: +1 (909) 422-1731
F: +1 (909) 783-3440

PSG® reserves the right to modify the information and illustrations contained in this document without prior notice. This is a non-contractual document. 01-2014

Authorized PSG Representative:

Copyright ©2014, Pump Solutions Group (PSG®), A Dover Company